PARTS LIST

2025.11.17

NILFISK

TABLE OF CONTENTS

Cabinet Push Clean & Basic & XC 1
Filtersystem Push Clean & Basic 4
Filtersystem XC 6
Motor Basic and Push Clean 8
Motor XC 10
Container ATTIX 30 12
Accessories 14
RECOMMENDED SPARE PARTS 16

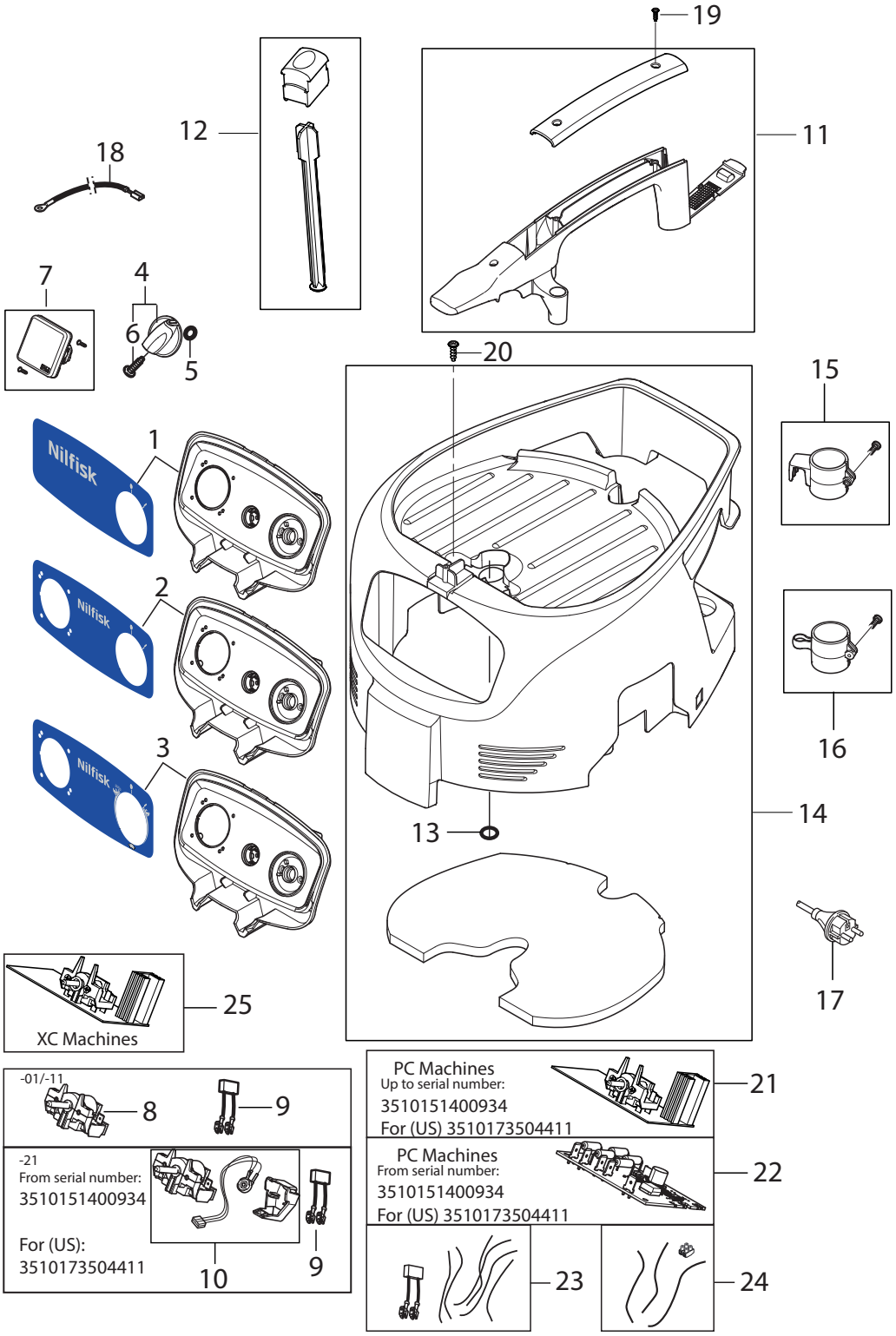
19
12
11
18
7
4
6
5
20
15
1
2
3
16
14
13
17
25
XC Machines
-01/-11
8
9
-21
From serial number:
3510151400934
For (US):
3510173504411
10
9
PC Machines
Up to serial number:
3510151400934
For (US) 3510173504411
21
PC Machines
From serial number:
3510151400934
For (US) 3510173504411
22
23
24

Pos.	Artikel-Nr.	Menge	Variante	Notes
00	302003502	1	Verpackungskarton	
00	302003503	1	BOX KIT ATTIX 40	
00	302003504	1	Verpackung ATTIX 50	
1	302004047	1	Schaltkasten NILFISK-ALTO	
2	302004048	1	Schaltkasten NILFISK-ALTO	
3	302004049	1	Schaltkasten NILFISK-ALTO	[1]
4	909100204	1	Drehknopf 6x5 blau	
5	9868	1	O-Ring 10x2,5	
6	32526	1	Schraube BL- 2,9X19 B	
7	302004036	1	Steckdose	
7	302004336	1	Steckdose 2 polig 13A.	
7	107400060	1	STECKDOSE 16A/250V DK	
7	302004034	1	Steckdose	
7	107400059	1	Steckdose 10A/250V CH	
7	107400057	1	STECKDOSE 16A/110V GB	
7	302004338	1	SOCKET 15A/125V US/CSA	
8	107413448	1	ROTARY SWITCH 2 POS 16A KIT	[2]
9	107404542	1	Entstörkondensator	
10	107413449	1	ROTARY SWITCH 3 POS+REG 16A KIT	[3]
11	302004050	1	Traggriff	[4]
11	107400062	1	Griff Attix 30 40 50 PC	[5]
12	302004051	1	FILTER ENTSTAUBER	[6]
13	302004061	1	O-RING 25X2 NBR 70	
14	107400061	1	ABDECKUNG SCHWARZ BASIC X	
14	302004046	1	ABDECKUNG SCHWARZ PC	
15	302004027	1	Halter	
16	107400064	1	ROHRHALTER	
17	107402644	1	Netzkabel H05RR-F2X0	[7]
17	107417418	1	POWER CORD KIT VCTF 1.25MM 3C JP PSE	[8]
17	107400268	1	CORD H05RR-F 2X0.75 GB	
17	107409849	1	Anschlussleitung AUS, NZ	[9]
17	302004038	1	Anschlussleitung GB, IRL, MAL	[10]
17	302004332	1	NETZKABEL US	[11]
17	107402642	1	Netzkabel	[12]
17	107420520	1	POWER CORD H05RR-F 3G1,0MM IP55 CH	[13]
17	302004014	1	Anschlussleitung Europa	[14]
17	107402641	1	Anschlussleitung Europa	[15]
17	107400272	1	CORD H05RR-F 3G1.5 ZA	[16]
17	302004040	1	Anschlussleitung J	[17]
17	107400271	1	Anschlussleitung H07BQ-F 3G2.5 GB	[18]
17	107400270	1	Anschlussleitung H05RR-F 3G1,5 BS1 363 G	[19]
17	107400266	1	Kabel H05RR-F 2X0.75 Attix 30-01	[20]
17	107409133	1	POWER CORD EU	[21]
18	107400263	1	Kabel 2,5X150 YE/GR	
18	107400264	1	Kabelsatz 1x150 220V-240V	
19	302004032	1	Schraube 3.5X18	
20	302004029	1	SCREW 5X18	
21	302004060	1	Ein Aus Schalter Softstar	[22]
21	302004011	1	Auto On-Off Schalter Elektronik	[23]
21	107400470	1	AUTO EIN-/AUS-ELEKTRONIK PC	[24]
22	107413465	1	SOFTSTART PCBA 1-STAGE KIT1 220-240V	[25]
22	107413466	1	PCBA 1M-1S KIT1 100-120V	[26]
22	107413467	1	AUTO ON/OFF PCBA 1-STAGE KIT1 220-240V	[27]
22	107413468	1	AUTO ON/OFF PCBA 1-STAGE KIT1 100-120V	[28]
23	107414081	1	WIRE/CAPACITOR KIT1	
24	107414082	1	WIRES FOR US SOCKET KIT	[29]
25	107400261	1	Elektronik Attix 30,50 XC	[30]
25	107400260	1	Elektronik Attix 30,50 XC	[31]
	302003808	1	TUBE HOLDER KIT	[32]

Part Notes:

[1]	-	for Push clean and XC
[2]	-	for -01 PC without softstart
[3]	-	From Serial Number 3510151400934
[4]	-	Basic/XC
[5]	-	for Push clean
[6]	-	Only Push Clean models
[7]	-	220-240V 50/60HZ EU
[8]	-	100V 50/60HZ JP
[9]	-	ATTIX 30-01 PC 240V 50HZ AU
[10]	-	GB
[11]	-	120V 60HZ US
[12]	-	DK - grounding
[13]	-	220-240V 50/60HZ CH
[14]	-	ATTIX 30-01 PC 220-240V 50/60HZ EU
[15]	-	21 XC 230/1/50 EU
[16]	-	220-240V 50/60HZ ZA
[17]	-	STOCK COVERS GUARANTEE 100V/50-60HZ JP (Approval UL)
[18]	-	110 1 50 GB
[19]	-	0H PC 230/1/50 GB, 2M PC 230/1/50 GB
[20]	-	230/1/50 CH
[21]	-	Orange 220-240V 50/60HZ EU
[22]	-	for -01 PC, -11PC (230-240V)
		Up to Serial Number 3510151400934
		Up to Serial Number (US) 3510173504411 PB-COM-LI-2015-001 ATTIX 30-40-50 PC_New Electronics
[23]	-	for -21 PC (230-240V)
		Up to Serial Number 3510151400934
		Up to Serial Number (US) 3510173504411 PB-COM-LI-2015-001 ATTIX 30-40-50 PC_New Electronics
[24]	-	for -21 PC (110-120V)
		Up to Serial Number 3510151400934
		Up to Serial Number (US) 3510173504411 PB-COM-LI-2015-001 ATTIX 30-40-50 PC_New Electronics
[25]	-	-01 PC, -11 PC (230-240V),
		From Serial Number 3510151400934
		PB-COM-LI-2015-001 ATTIX 30-40-50 PC_New Electronics
[26]	-	-01 PC (110-120V) From Serial Number (US) 3510173504411 PB-COM-LI-2015-001 ATTIX 30-40-50 PC_New Electronics
[27]	-	-21 PC (230V), From Serial Number 3510151400934 PB-COM-LI-2015-001 ATTIX 30-40-50 PC_New Electronics
[28]	-	-21 PC (100-120V) From Serial Number (US) 3510173504411 PB-COM-LI-2015-001 ATTIX 30-40-50 PC_New Electronics
[29]	-	US only
[30]	-	NO REPLACEMENT
		for -21 XC (100-120V) PB-COM-LI-2015-001 ATTIX 30-40-50 PC_New Electronics
[31]	-	for -21 XC(230-240V) PB-COM-LI-2015-001 ATTIX 30-40-50 PC_New Electronics
[32]	-	15 16
		JP models

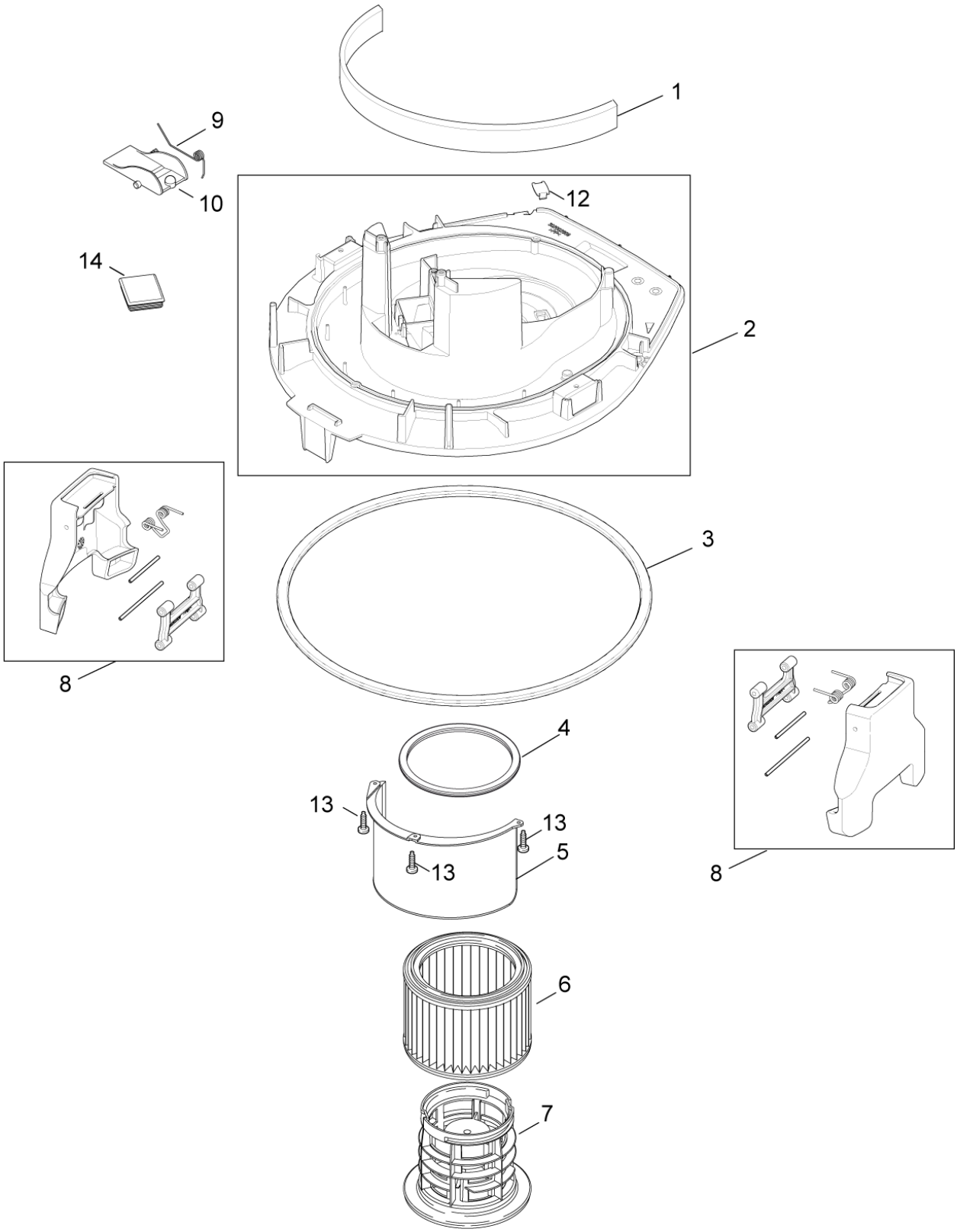
1
9
10
12
14
2
3
8
4
13
13
13
5
8
6
7

Pos.	Artikel-Nr.	Menge	Variante	Notes
1	302004010	1	Dämmeinlage	
2	302004007	1	Motorgehäuse	
3	107400056	1	GASKET FOR CONTAINER	[1]
3	302004008	1	Dichtring	[2]
4	302000460	1	Dichtring	
5	302004016	1	Abweiser	
6	302000490	1	Filterelement M-Klasse Ø 185x140 mm	
6	302001095	1	HEPA Filterelement Ø185X140 mm	[3]
6	302000658	1	Filterelement H-Klasse, Ø 211x140 mm	[4]
7	107402646	1	Filterkorb	
8	107400301	2	Klammer	[5]
9	909100083	1	Schenkelfeder	
10	302000344	1	Klappe	
12	107401937	1	Stopfen Grundplatte, Kit	[6]
13	302004029	3	SCREW 5X18	
14	302004058	1	ABDICHTUNG FÜR BASIC	

Part Notes:

[1] - ATTIX 50
[2] - ATTIX 30
[3] - HEPA
[4] - FOR ATTIX 50-21 PC CLEAN ROOM
[5] - For macihines produced before serial number 09110030030
use Container upgrate kit 107400311, ATTIX 30 or 107400312, ATTIX 50Vac-092 clamp and container
[6] - For machines up to week 35.2011

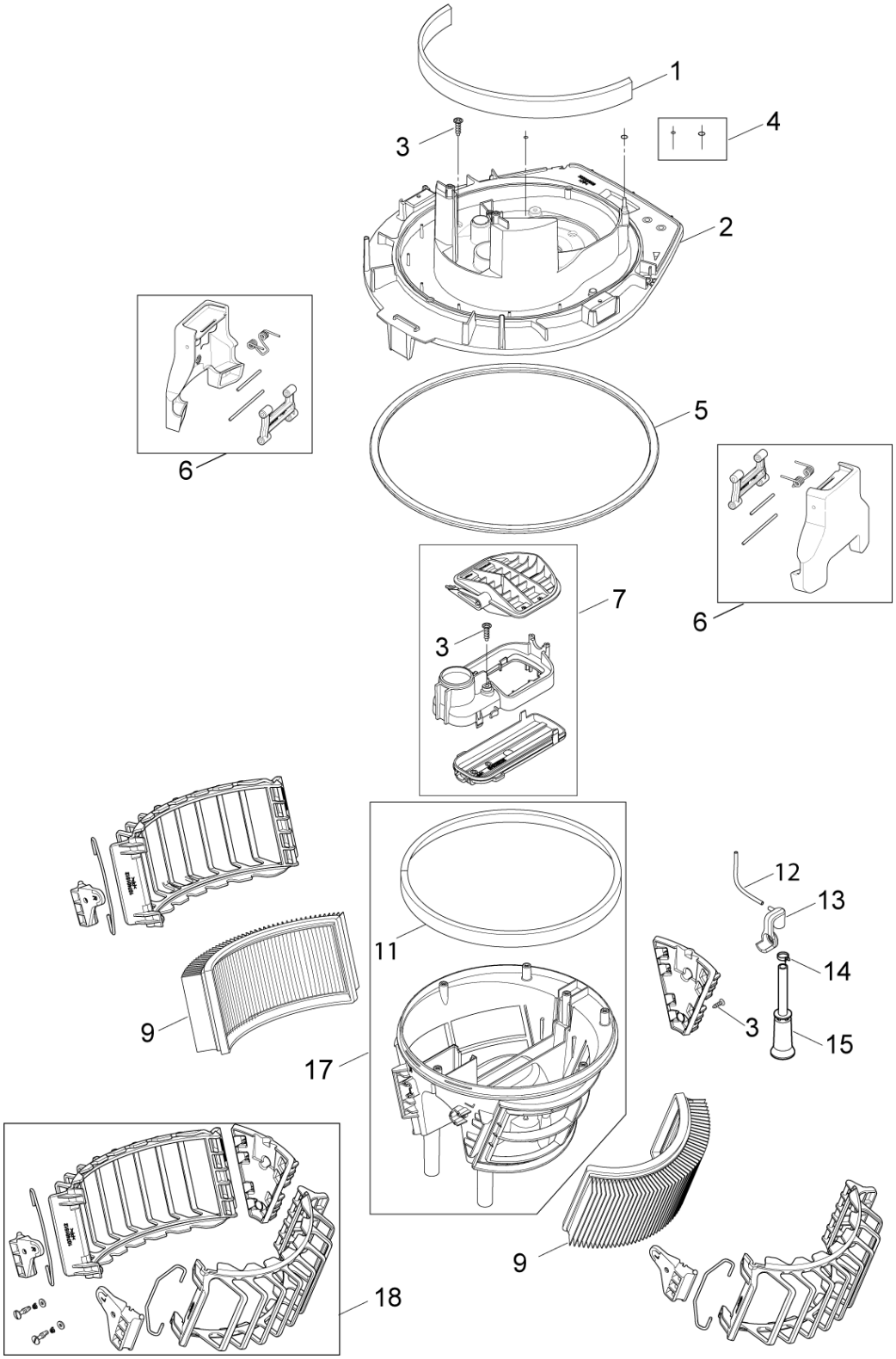
1
4
3
2
6
5
6
7
3
12
13
11
14
9
3
15
17
9
18

Pos.	Artikel-Nr.	Menge	Variante	Notes
1	302004010	1	Dämmeinlage	
2	107400300	1	Grundplatte XC	
3	302004029	9	SCREW 5X18	
4	107400274	1	O-RING XC KIT	
5	302004008	1	Dichtring	[1]
5	107400056	1	GASKET FOR CONTAINER	[2]
6	107400301	2	Klammer	
7	107400277	1	Deckel für ATTIX 50-21 XC	
9	302002842	1	Flachfilter 2 Stück	
11	107400283	1	Abdichtung XC	
12	107400855	1	HOSE D3X1.5 TURBINE	
13	107400310	1	Halterung Niveauschalter	
14	107400285	1	Drahtklemme	
15	107400303	1	Schlauch D42X155	[3]
17	107400302	1	Filterklammer XC	
18	107402255	1	Filterbefestigungskit	

Part Notes:

[1] - ATTIX 30
[2] - ATTIX 50
[3] - NO REPLACEMENT

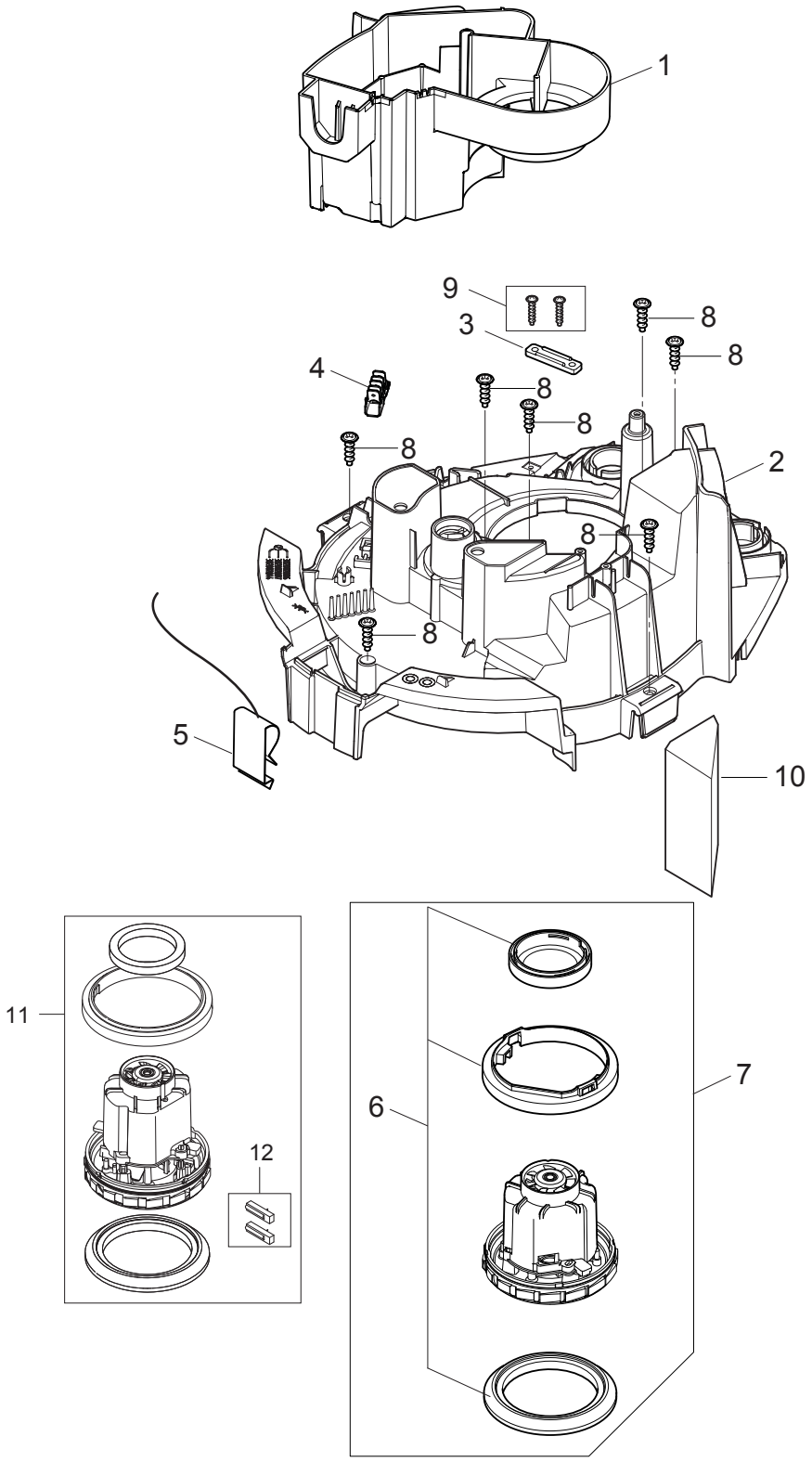
1
9
3
8
8
4
8
8
8
2
8
8
5
10
11
12
6
7

Pos.	Artikel-Nr.	Menge	Variante	Notes
1	302004015	1	Luftkanal	[1]
2	302004009	1	Deckel	
3	302004030	1	Lasche	
4	302004031	1	Steckverteiler 6-POL 16A	
5	302004023	1	Ableiter	
6	302003385	1	Satz Gummiringe	
7	302003384	1	Elektromotor 230/240 V	
7	302004006	1	Elektromotor 100 V/50, 60 Hz JP	[2]
8	302004029	7	SCREW 5X18	
9	302004032	1	Schraube 3.5X18	
10	302004045	1	Diffusor	
11	107417417	1	MOTOR KIT 1000W 110-120V 50/60HZ	[3]
12	107417399	1	CARBON BRUSH ASSY KIT 2 PCS 110-120V	[3]

Part Notes:

[1] - During service or repair of vacuum head always change Airguide 302004015 and Cover for air circuit 107401051

[2] - JP

[3] - 110V 50HZ GB, 120V 60HZ US

TSB-LI-VACS-2016-001 New Attix 30 and Attix 50 motor

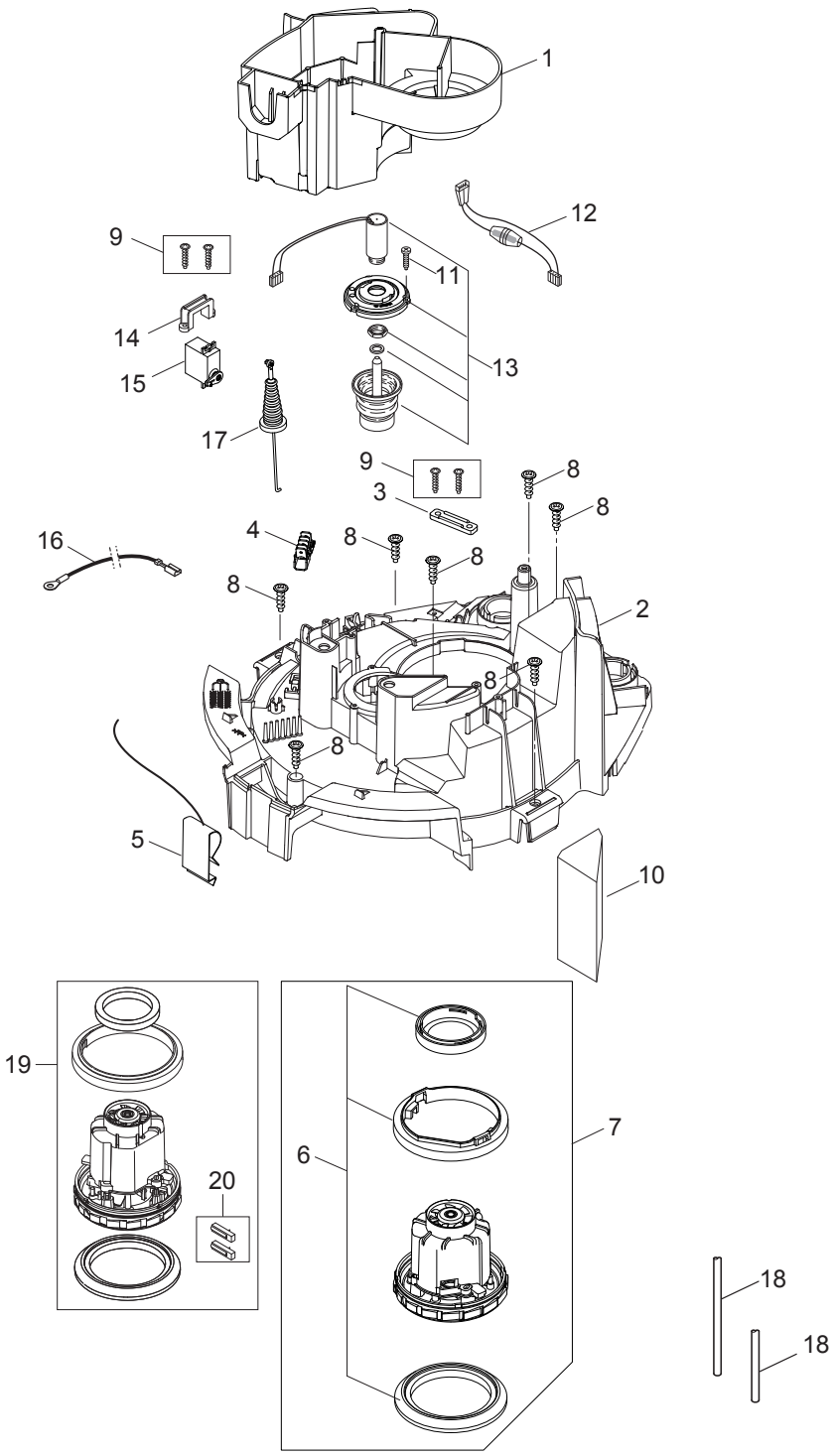
1
12
9
11
14
13
15
17
9
8
3
8
16
4
8
8
8
2
8
8
5
10
19
7
6
20
18
18

Pos.	Artikel-Nr.	Menge	Variante	Notes
1	302004015	1	Luftkanal	[1]
2	107400287	1	Spannplatte XC	
3	302004030	1	Lasche	
4	302004031	1	Steckverteiler 6-POL 16A	
5	302004023	1	Ableiter	
6	302003385	1	Satz Gummiringe	
7	302003384	1	Elektromotor 230/240 V	
7	302004006	1	Elektromotor 100 V/50, 60 Hz JP	
8	302004029	7	SCREW 5X18	
9	302004032	2	Schraube 3.5X18	
10	302004045	1	Diffusor	
11	302003319	3	SCREW KIT ATTIX/IVB	
12	107410697	1	SOLENOID FUSE WIRE 230V AT 0,5A KIT	
13	107400291	1	Magnet 230v	
13	107400292	1	MAGNET 12V FPR 110V	
14	107400289	1	Halterung Servo	
15	107400290	1	Servo XC	
16	107400262	1	Kabel 1x200 gelb/grün	
17	107400276	1	Servokabel XC	
18	107400309	2	Schlauch D3X1,5	
19	107417417	1	MOTOR KIT 1000W 110-120V 50/60HZ	[2]
20	107417399	1	CARBON BRUSH ASSY KIT 2 PCS 110-120V	[2]

Part Notes:

[1] - During service or repair of vacuum head always change Airguide 302004015 and Cover for air circuit 107401051

[2] - 110V 50HZ GB, 120V 60HZ US

TSB-LI-VACS-2016-001 New Attix 30 and Attix 50 motor

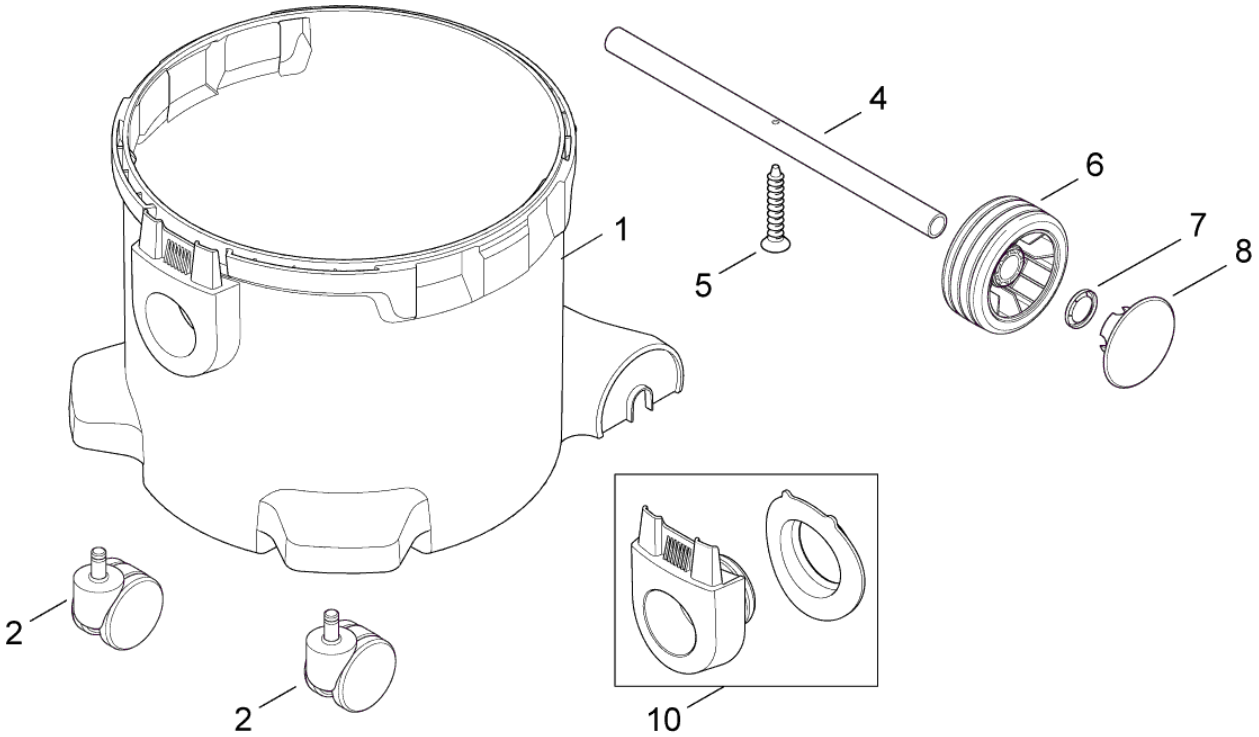
4
6
7
8
1
5
2
2
10

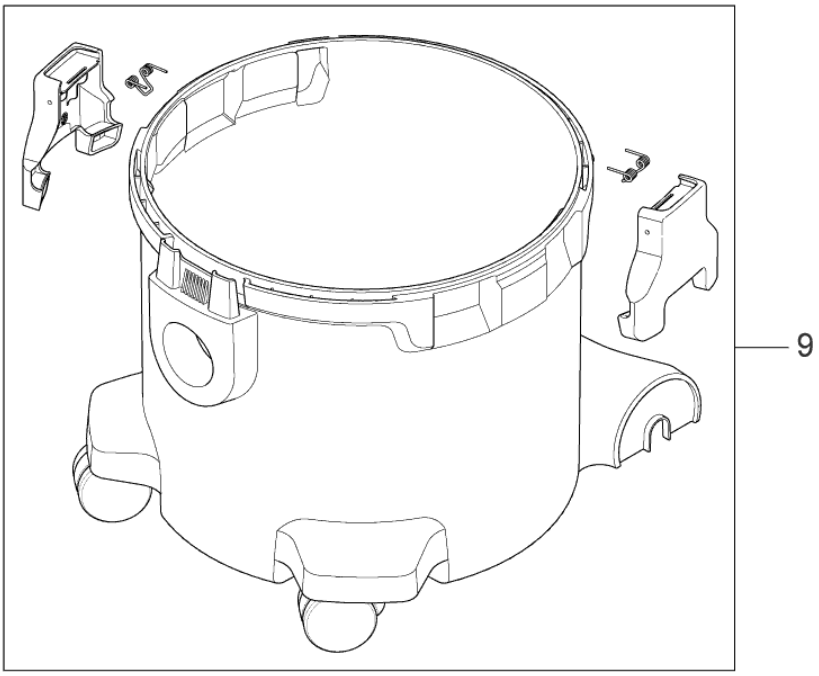
9

Pos.	Artikel-Nr.	Menge	Variante	Notes
1	107400304	1	Behälter ATTIX 30	[1]
2	107415105	2	LENKROLLE Ø60 PIN Ø11X22	
4	302004022	1	Achse	
5	107400063	1	SCREW 5X35	
6	302000465	2	Rad	
7	47302	2	Sich. Ring ¥ 28.6/ ¥20x	
8	65202	2	Radkappe	
9	107400311	1	Behälter ATTIX 30	[2]
9	302003443	1	CONTAINER ATTIX30	[3]
10	107402742	1	Anschlussstutzen für	

Part Notes:

[1] - For macihines produced before serial number 09110030030 use Container upgrate kit 107400311Vac-092 clamp and container

[2] - Vac-092 clamp and container

For macihines produced before serial number 09110030030 use Container upgrate kit 107400311

[3] - JP

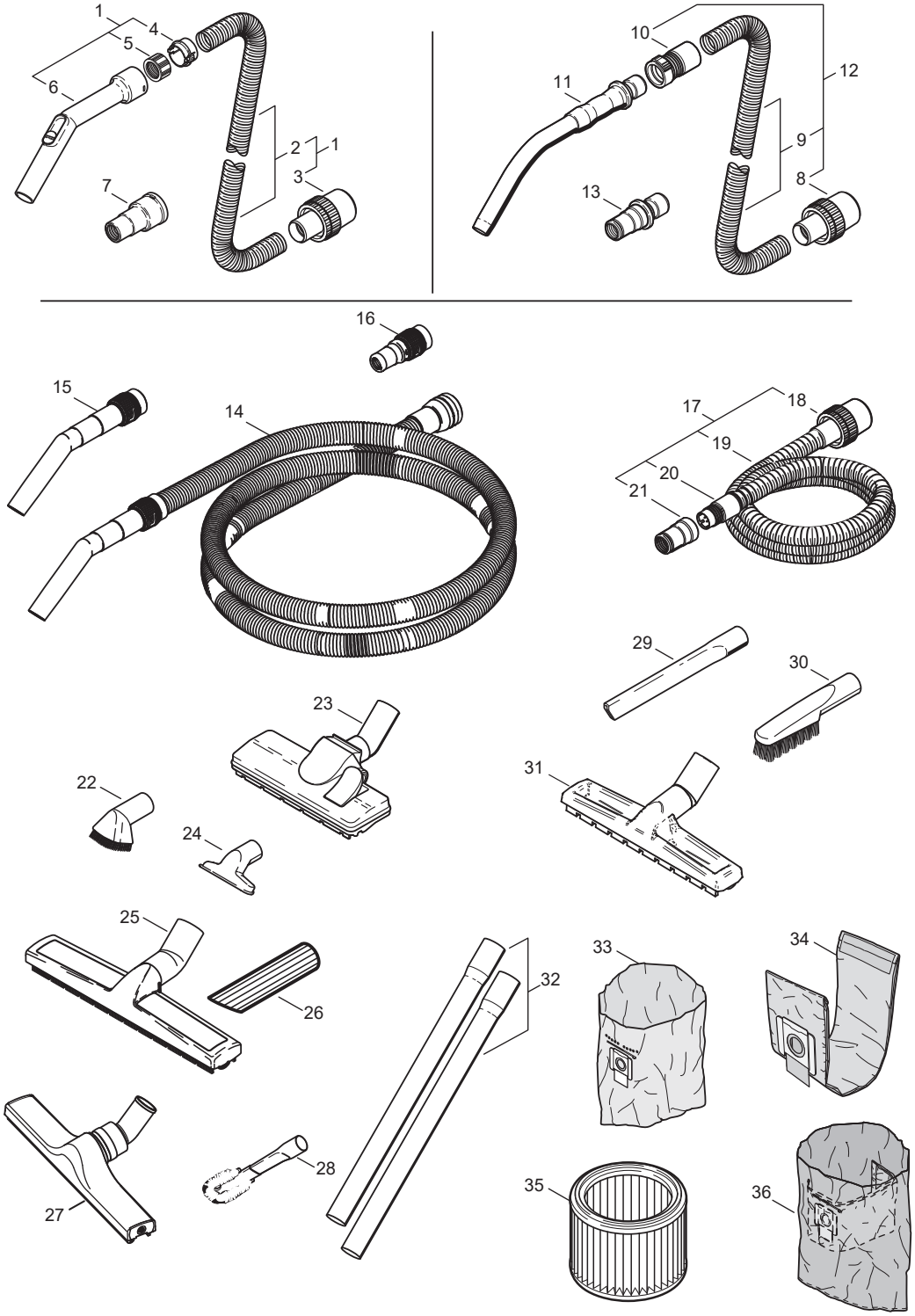
1
4
5
6
2
1
3
7
10
11
12
9
8
13
16
15
14
17
18
19
20
21
29
30
23
22
24
31
25
26
33
34
32
27
28
35
36

Pos.	Artikel-Nr.	Menge	Variante	Notes
1	302000473	1	Universalschlauch, Ø 32 mm x 3 m	
2	14240	1	Saugschlauch Ø 32 mm, Meterware	
3	15103	1	Muffe Ø 32x50 mm	
4	61154	1	Ring 32	
5	302000476	1	Überwurfmuffe 32	
6	46691	1	Handrohr gebog., Ø 36 mm, Edelstahl	[1]
6	60911	1	Handrohr Ø 32 mm/ Ø 35 mm	
7	60916	1	Werkzeugadapter Ø 27 mm/35 mm/38 mm	
8	15102	1	Muffe Ø 36x50 mm	
9	11985	1	Saugschlauch Ø 36 mm , Meterware	
9	11919	1	Saugschlauch Ø 36 mmx20 m	
10	46690	1	Quicksystem-Muffe, Ø 36 mm, antistatisch	
11	302000528	1	Handrohr, gebog., verchromt, Ø 36 mm	
11	46691	1	Handrohr gebog., Ø 36 mm, Edelstahl	
12	46948	1	Saugschlauch, Ø 36 mmx3 m	
13	302000535	1	Werkzeugadapter, Quicksystem, Ø 27 mm	
14	107409976	1	Universalsaugschlauch, Ø 32 mmx3,5 m	
15	107413340	1	Gebogenes Handrohr	
16	107409977	1	Werkzeugadapter, Ø 32 mm	
17	107406091	1	Saugschlauch D27x3500 mit Werkzeugadapte	[2]
18	15369	1	Muffe Ø 27x50 mm, antistatisch	
19	15326	1	Saugschlauch Ø 27 mmx1 m, Meterware	
20	63509	1	Muffe Ø 27 mm	
21	107404520	1	Werkzeugadapter, Ø 27 mm/36-24 mm	
22	5146	1	Saugbürste Ø36x70 mm, Kunststoff, PA/PP	
23	302000477	1	Bodendüse, Ø 36x260 mm	
24	14295	1	Universaldüse Ø 36x115 mm, Kunststoff	
25	107419503	1	Bodendüse nass/trocken D36X400MM	
26	5067	1	Schrägrohrdüse Ø36mm	
27	302003666	1	Profi-Bodendüse D36 400mm	
27	302003796	1	Ersatz-Bürstenleiste,	[3]
27	302003797	1	Ersatz-Gummilippen,	[3]
28	5144	1	Heizkörperbürstendüse	
29	6084	1	Fugendüse Ø 36x300 mm	
30	6086	1	Bürstendüse Ø 36x230 mm, PP/PA	
31	107402706	1	Bodendüse D36 Nass-Trocken	[2]
32	107408074	1	Verlängerungsrohr Edels. Ø36x505mm, VPE2	
32	302000529	1	Verlängerungsrohre Ø36x505 mm, VPE 2	
32	107400032	1	Verlängerungsrohr Alu Ø36x500mm, VPE 2	
33	302000804	1	Entsorgungssack (Set 5)	
34	302004000	1	Vlies Filtersack VPE 5	
35	302000490	1	Filterelement M-Klasse Ø 185x140 mm	
36	107400236	1	SICHERHEITSFILTERSACK VPE 5STK	
36	107400233	1	Sicherheitsfiltersack VPE 5 Stück	
	107400079	1	Airbox 230v 50 HZ EU	[4]

Part Notes:

[1] - JP

[2] - TSB-LI-VACS-2017-01 - AERO and ATTIX hose

DE TSB-LI-VACS-2017-01 AERO und ATTIX Click-System Saugschlauch

[3] - For floor nozzle 302003666

[4] - PRUNED - NO REPLACEMENT

Use linkAirbox 2010

No Diagram Available

Parts List Only

Resource notes:

* NOTE TSB Vac-092 clamp and containerVac-092 clamp and container For macihines produced before serial number 09110030030 use Container upgrate kit 107400311, ATTIX 30 or 107400312, ATTIX 50 ** NOTE: During service or repair of vacuum head always change Airguide 302004015 and Cover for air circuit 107401051

Pos.	Artikel-Nr.	Menge	Variante	Notes
01	107421461	1	POWER CORD H05RR-F 3G1,5X8.4M CEE EU	
01	302004038	1	Anschlussleitung GB, IRL, MAL	
01	302004336	1	Steckdose 2 polig 13A.	
01	107400060	1	STECKDOSE 16A/250V DK	
01	107400261	1	Elektronik Attix 30,50 XC	[1]
01	107400271	1	Anschlussleitung H07BQ-F 3G2.5 GB	
01	302003385	1	Satz Gummiringe	
01	302001095	1	HEPA Filterelement Ø185X140 mm	[2]
01	107415105	1	LENKROLLE Ø60 PIN Ø11X22	
01	302004007	1	Motorgehäuse	
01	107400266	1	Kabel H05RR-F 2X0.75 Attix 30-01	
01	107400291	1	Magnet 230v	
01	302004015	1	Luftkanal	[3]
01	107417417	1	MOTOR KIT 1000W 110-120V 50/60HZ	
01	302004006	1	Elektromotor 100 V/50, 60 Hz JP	
01	107400268	1	CORD H05RR-F 2X0.75 GB	
01	107400304	1	Behälter ATTIX 30	[4]
01	107400309	1	Schlauch D3X1,5	
01	302004009	1	Deckel	
01	107402644	1	Netzkabel H05RR-F2X0	
01	107400056	1	GASKET FOR CONTAINER	[5]
01	47302	1	Sich. Ring ¥ 28.6/ ¥20x	
01	302000465	1	Rad	
01	302004011	1	Auto On-Off Schalter Elektronik	[6]
01	302004060	1	Ein Aus Schalter Softstar	[7]
01	302004027	1	Halter	
01	107400277	1	Deckel für ATTIX 50-21 XC	
01	107400300	1	Grundplatte XC	
01	302004040	1	Anschlussleitung J	[8]
01	107400260	1	Elektronik Attix 30,50 XC	[9]
01	107400287	1	Spannplatte XC	
01	302004332	1	NETZKABEL US	
01	107400283	1	Abdichtung XC	
01	107400311	1	Behälter ATTIX 30	[4]
01	302004000	1	Vlies Filtersack VPE 5	
01	107400064	1	ROHRHALTER	
01	302004023	1	Ableiter	
01	302002842	1	Flachfilter 2 Stück	
01	107413448	1	ROTARY SWITCH 2 POS 16A KIT	[10]
01	107420520	1	POWER CORD H05RR-F 3G1,0MM IP55 CH	
01	302003384	1	Elektromotor 230/240 V	
01	107400292	1	MAGNET 12V FPR 110V	
01	107402642	1	Netzkabel	
01	107400301	1	Klammer	[4]
01	107402641	1	Anschlussleitung Europa	
01	107400290	1	Servo XC	
01	107400270	1	Anschlussleitung H05RR-F 3G1,5 BS1 363 G	
01	107400059	1	Steckdose 10A/250V CH	
01	302004058	1	ABDICHTUNG FÜR BASIC	
01	909100204	1	Drehknopf 6x5 blau	
01	302004008	1	Dichtring	[11]
01	302000460	1	Dichtring	
01	302004338	1	SOCKET 15A/125V US/CSA	
01	107400057	1	STECKDOSE 16A/110V GB	
01	302004014	1	Anschlussleitung Europa	
01	107409849	1	Anschlussleitung AUS, NZ	
01	107400276	1	Servokabel XC	
01	107400272	1	CORD H05RR-F 3G1.5 ZA	
01	107402255	1	Filterbefestigungskit	

Pos.	Artikel-Nr.	Menge	Variante	Notes
01	302000490	1	Filterelement M-Klasse Ø 185x140 mm	
01	302004036	1	Steckdose	
01	302004034	1	Steckdose	

Part Notes:

[1] - 100-120V
NO REPLACEMENT
[2] - HEPA
[3] - SEE NOTE**
[4] - SEE NOTE*
[5] - ATTIX 50
[6] - FOR -21 PC
[7] - FOR -11 PC & -01 PC WITH SOFTSTART
[8] - STOCK COVERS GUARANTEE
[9] - 230-240V
[10] - FOR -01 PC WITHOUT SOFTSTART
[11] - ATTIX 30

© 2023 - Nilfisk A/S