PARTS LIST



2025.08.28

NILFISK

TABLE OF CONTENTS

GENERAL VIEW 1
CHASSIS ASSEMBLY 1 3
CHASSIS ASSEMBLY 2 5
CHASSIS COMPONENTS 7
HOPPER SYSTEM 9
Hopper Assy after SN 3510242500559 11
VAC FAN - PANEL FILTER ASSY 14
RIGHT SIDE BROOM ASSY 16
LEFT SIDE BROOM ASSY 18
MAIN BROOM ASSY 20
CONTROL ASSEMBLY 22
PEDALS SYSTEM 24
ELECTRIC BOX 26
CONTROL PANEL AND RELAYS 28
REAR COVER ASSY 30
ELECTRIC MOTOR ASSY 32
HYDRAULIC PLAN ASSY 1 34
HYDRAULIC PLAN ASSY 2 36
HYDRAULIC PLAN ASSY 3 38
DRIVE MOTOR SCHEME 40
STEERING SCHEME 42
FLAP AND HOPPER SCHEME 44
SIDE BROOM SCHEME 46
ACCESSORIES - 1 48
ACCESSORIES - 2 50
LIGHT FRONT LED KIT 48V 52
ACCESSORIES - 3 54
ACCESSORIES - 5 56
ACCESSORIES - 8 58
ACCESSORIES - 5 60
WIRING DIAGRAM BATTERY - 1 62
WIRING DIAGRAM BATTERY - 2 64
WIRING DIAGRAM BATTERY - 3 66
HYDRAULIC DIAGRAM BATTERY 68
RECOMMENDED SPARE PARTS 70
OPTIONALS 73
33019571_SIDE BROOM PROTECTION KIT 76

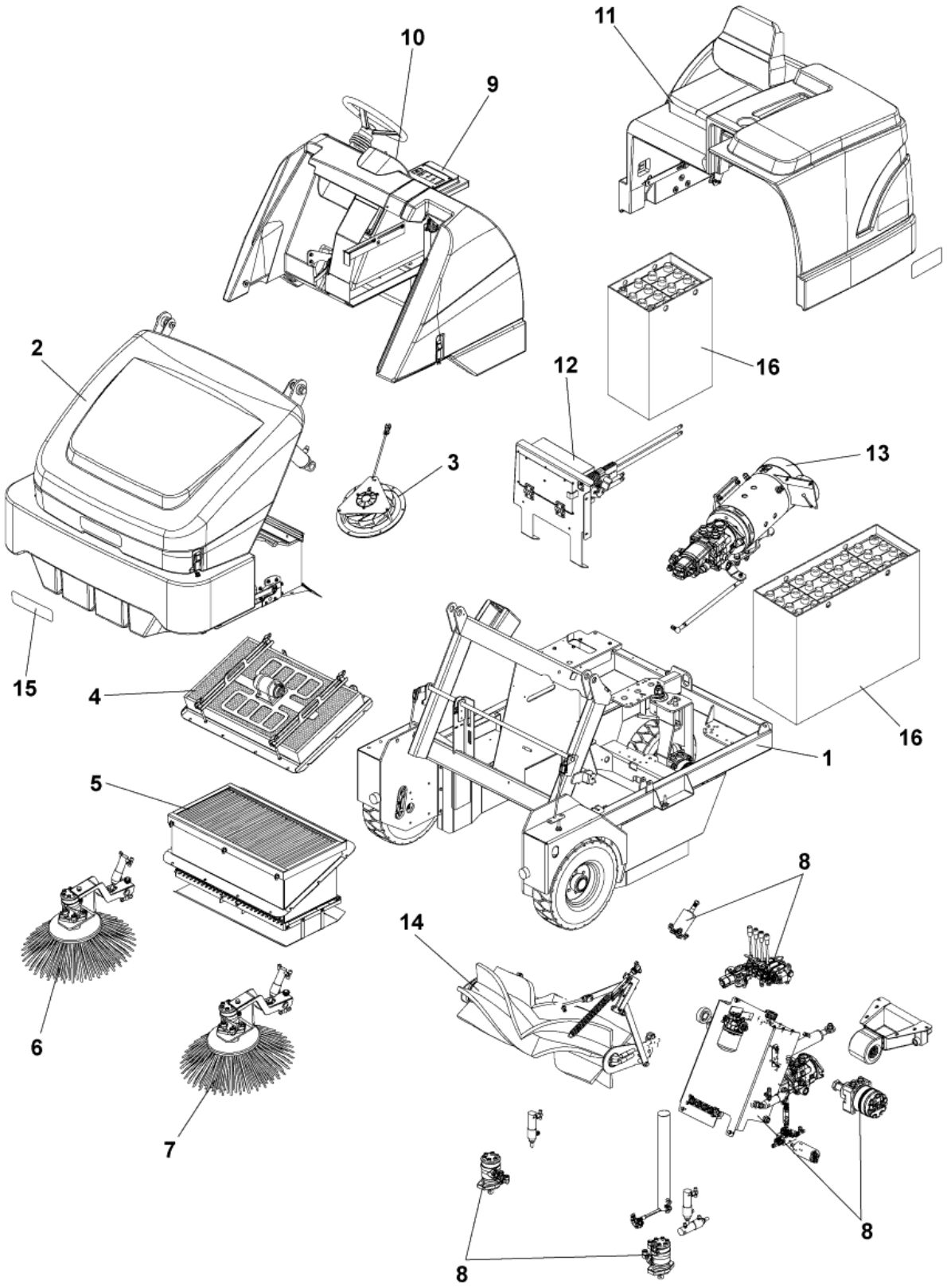
11
10
9
16
2
12
3
13
15
4
16
1
5
8
14
6
8
7
8
8

Pos.	Artikel-Nr.	Menge	Variante	Notes
NS	33023879	1	CARDBOARD SHEET 1650X1450MM	[1]
NS	33023878	1	CARDBOARD SHEET 2240X1560MM	[1]
1		1	CHASSIS ASSEMBLY	[2]
2		1	HOPPER SYSTEM	[3]
3		1	VAC FAN ASSY	[4]
4		1	PANEL ASSY	[5]
5		1	POCKET FILTER ASSY	
6		1	RIGHT SIDE BROOM ASSY	[6]
7		1	LEFT SIDE BROOM ASSY	[7]
8		1	HYDRAULIC PLANT ASSY	[8]
9		1	CONTROL ASSY	[9]
10		1	CONTROL PANEL AND RELAYS ASSY	[10]
11		1	REAR COVER ASSY	[11]
12		1	ELECTRIC BOX ASSY	[12]
13		1	ELECTRIC MOTOR ASSY	[13]
14		1	MAIN BROOM SYSTEM	[14]
15	33019727	1	DECALS SR 1601 B KIT	
16	80562010	1	Nassbatterie inkl. 2xTrog, 48V-375 AhBATTERY TRACTION 48 V 375 A	[15]
16	80554842	1	CHARGER HF 48V 60A R320BATTERY CHARGER 48V 50Ah	[15]

Part Notes:

[1] - ECN1013792 NEW PACKAGING DESIGN
[2] - CHASSIS ASSEMBLY 1 or CHASSIS ASSEMBLY 2 or CHASSIS COMPONENTS
[3] - HOPPER SYSTEM
[4] - VAC FAN
[5] - PANEL FILTER ASSY
[6] - RIGHT SIDE BROOM ASSY
[7] - LEFT SIDE BROOM ASSY
[8] - HYDRAULIC PLAN ASSY 1 or HYDRAULIC PLAN ASSY 2 or HYDRAULIC PLAN ASSY 3
[9] - CONTROL ASSEMBLY
[10] - CONTROL PANEL AND RELAYS
[11] - REAR COVER ASSY
[12] - ELECTRIC BOX
[13] - ELECTRIC MOTOR ASSY
[14] - MAIN BROOM ASSY
[15] - OPTIONAL

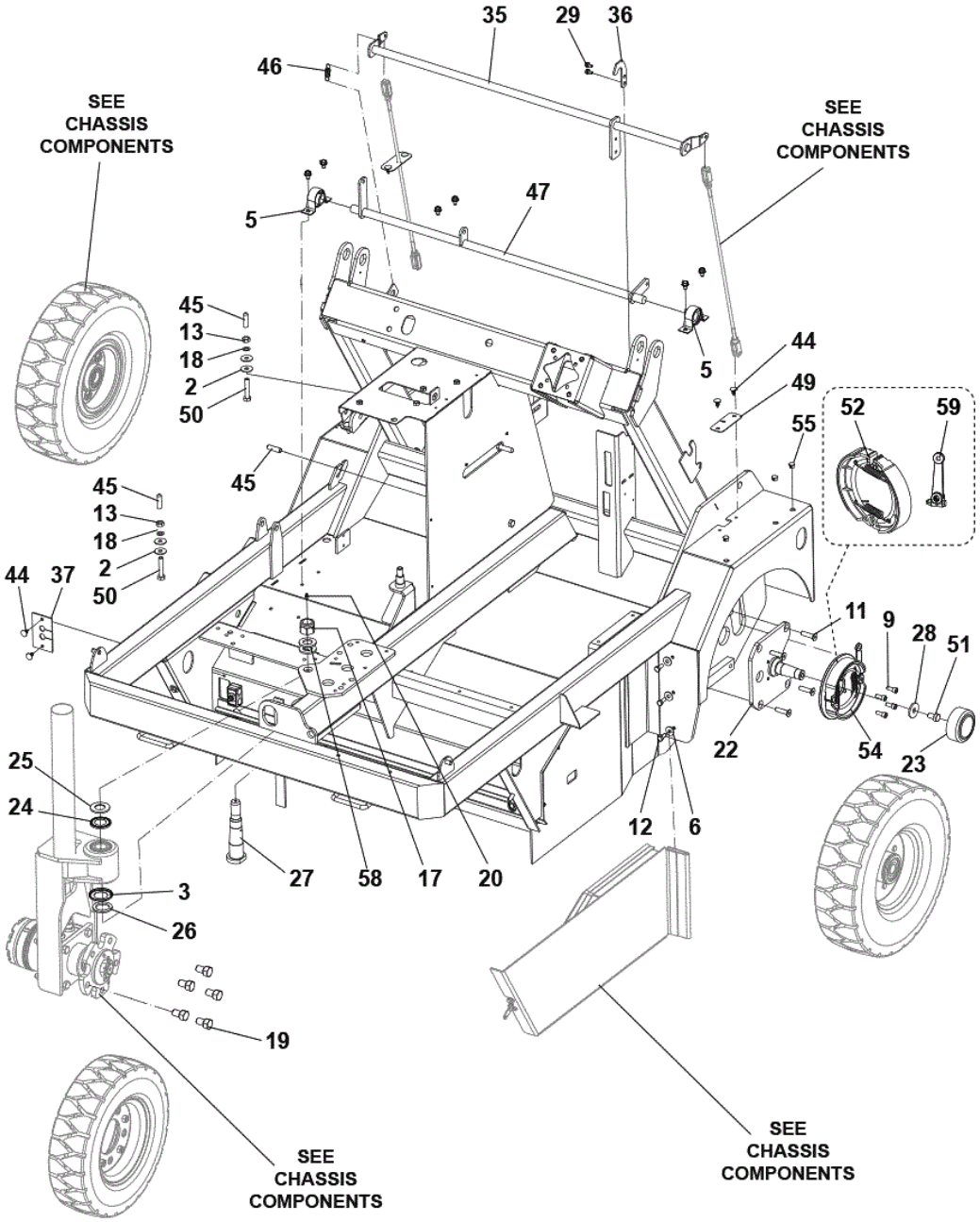
35
29
36
46
SEE CHASSIS COMPONENTS
SEE CHASSIS COMPONENTS
47
5
45
13
18
2
50
44
49
55
52
59
45
45
13
18
2
50
44
37
11
9
28
51
22
54
23
25
24
12
6
27
58
17
20
3
26
19
SEE CHASSIS COMPONENTS
SEE CHASSIS COMPONENTS

Pos.	Artikel-Nr.	Menge	Variante	Notes
3	33003125	1	Radnabe	
5	33003201	4	Halter	
22	33018790	1	SUPPORT FRONT WHEEL KIT	
23	1467021000	1	CAP 2 PCS SET	
24	33016909	1	RING NILOS AV 32006X	
25	33016910	1	WASHER UPPER	
26	33016911	1	WASHER LOWER	
27	33016912	1	PIN DRIVE YOKE PIVOT	
35	33017113	1	BAR JOINT BRAKE	
36	33017114	1	PLATE F BAR JOINT BRAKE LOCKING	
37	33023477	1	RUBBER F MAIN BROOM HOSES KIT	
46	33017199	1	Federspanner Kit	
47	33017220	1	BAR F TRACTION PUMP CONTROL	
49	33017266	2	RUBBER LEVER BRAKE	
52	1467066000	2	SHOE BRAKE SIP	
54	33020205	2	DRUM BRAKE KIT	[1]
54	33020204	2	DRUM BRAKE	
59	1467244000	1	LEVER F DRUM BRAKE PKD	
K1	33020409	1	HARDWARE CENTRING KIT	[2]
K2	33020410	1	HARDWARE BRAKE BAR KIT	[3]
K3	33020411	1	HARDWARE FRONT WHEEL SUPPORT KIT	[4]
K4	33020412	1	Befestigungs-Kit	[5]
K5	33020332	1	HARDWARE CHASSIS KIT	[6]
K6	33018791	1	FIXING GASKETS KIT	[7]

Part Notes:

[1] - UNTIL S/N 084734256
[2] - NOT SHOWN - POS. 2-13-18-45-50
[3] - NOT SHOWN - POS. 29-44
[4] - NOT SHOWN - POS. 9-28-51
[5] - NOT SHOWN - POS. 17-20-58
[6] - NOT SHOWN - POS. 3-13-16 chassis components POS. 2-6-9-11-12-13-17-18-19-20-28-29-44-45-50-51-55-58
[7] - NOT SHOWN - POS. 1-12-15-33-34

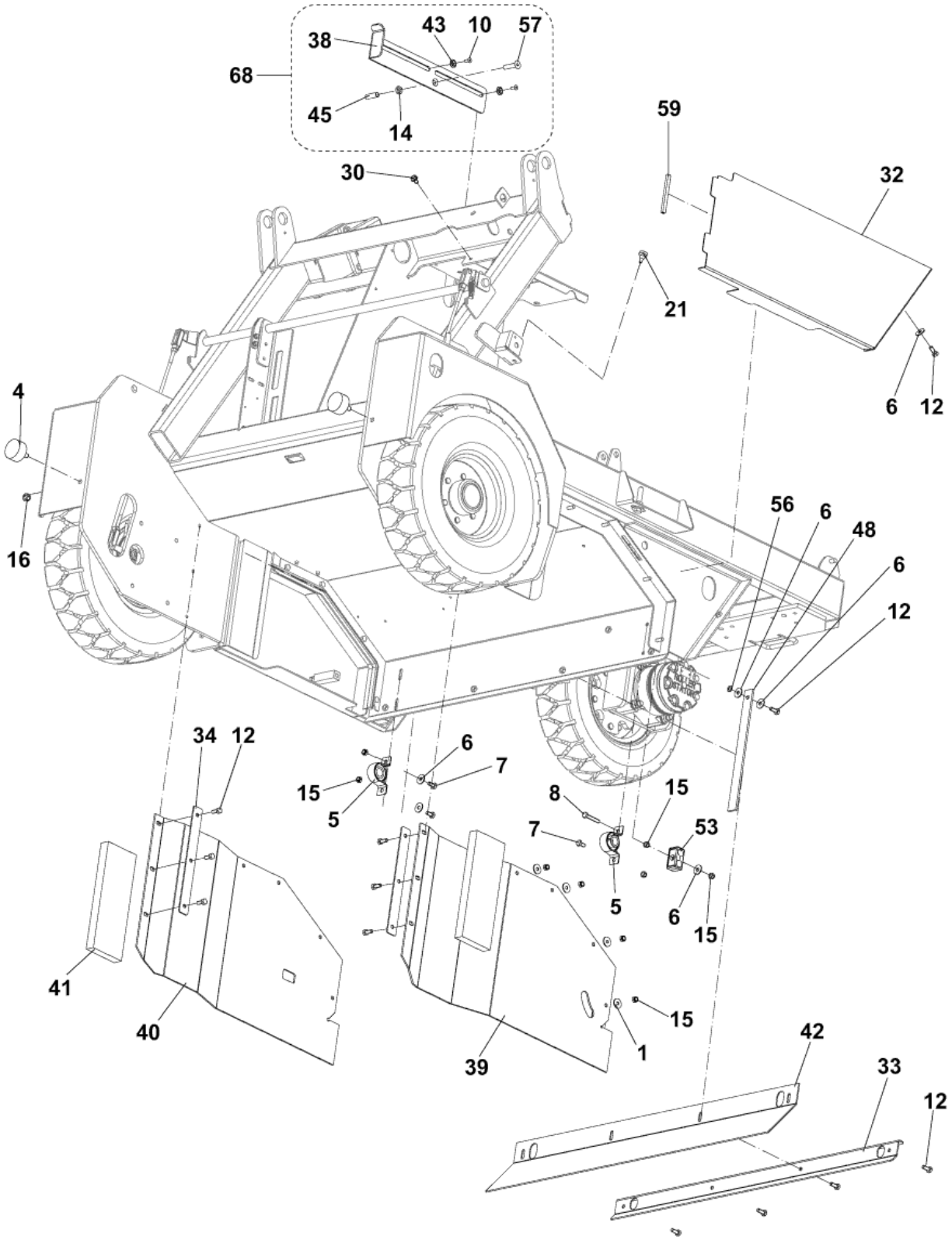
43
10
57
38
68
45
14
59
30
32
21
6
12
4
16
56
6
48
6
12
34
12
6
7
15
5
8
15
7
53
5
6
15
41
40
39
15
1
42
33
12

Pos.	Artikel-Nr.	Menge	Variante	Notes
4	33003129	2	Schwingungsdämpfer	
21	1467006000	1	PLUG ANTI VIBRATION D.8-D.20 10 PCS SET	
32	33017057	1	Seitenabdeckung, links	
39	33017171	1	Gummi links	
40	33017172	1	Gummi Rechts	
41	33017173	2	Abdichtung	
42	33017174	1	FLAP REAR BROOM	
48	33017262	1	Erdungsband	
53	33018539	1	CLAMP PIPE TWIN PLASTIC D.18MM	
59	33021180	1	GASKET U SHAPED PVC L.100MM SIP	
K5	33020332	1	HARDWARE CHASSIS KIT	[1]
K6	33018791	1	FIXING GASKETS KIT	[2]
K7	33020333	1	HARDWARE FLAP KIT	[3]
K8	33019212	1	Behälter-Stop-Kit	[4]
K9	33023472	1	SUPPORT BEARING KIT	[5]

Part Notes:

[1] - NOT SHOWN - POS. 3-13-16 chassis components POS. 2-6-9-11-12-13-17-18-19-20-28-29-44-45-50-51-55-58
[2] - NOT SHOWN - POS. 1-12-15-33-34
[3] - NOT SHOWN - POS. 1-6-12-15-16
[4] - POS. 10-14-38-43-45-57
[5] - NOT SHOWN - POS. 5-6-7-8-15

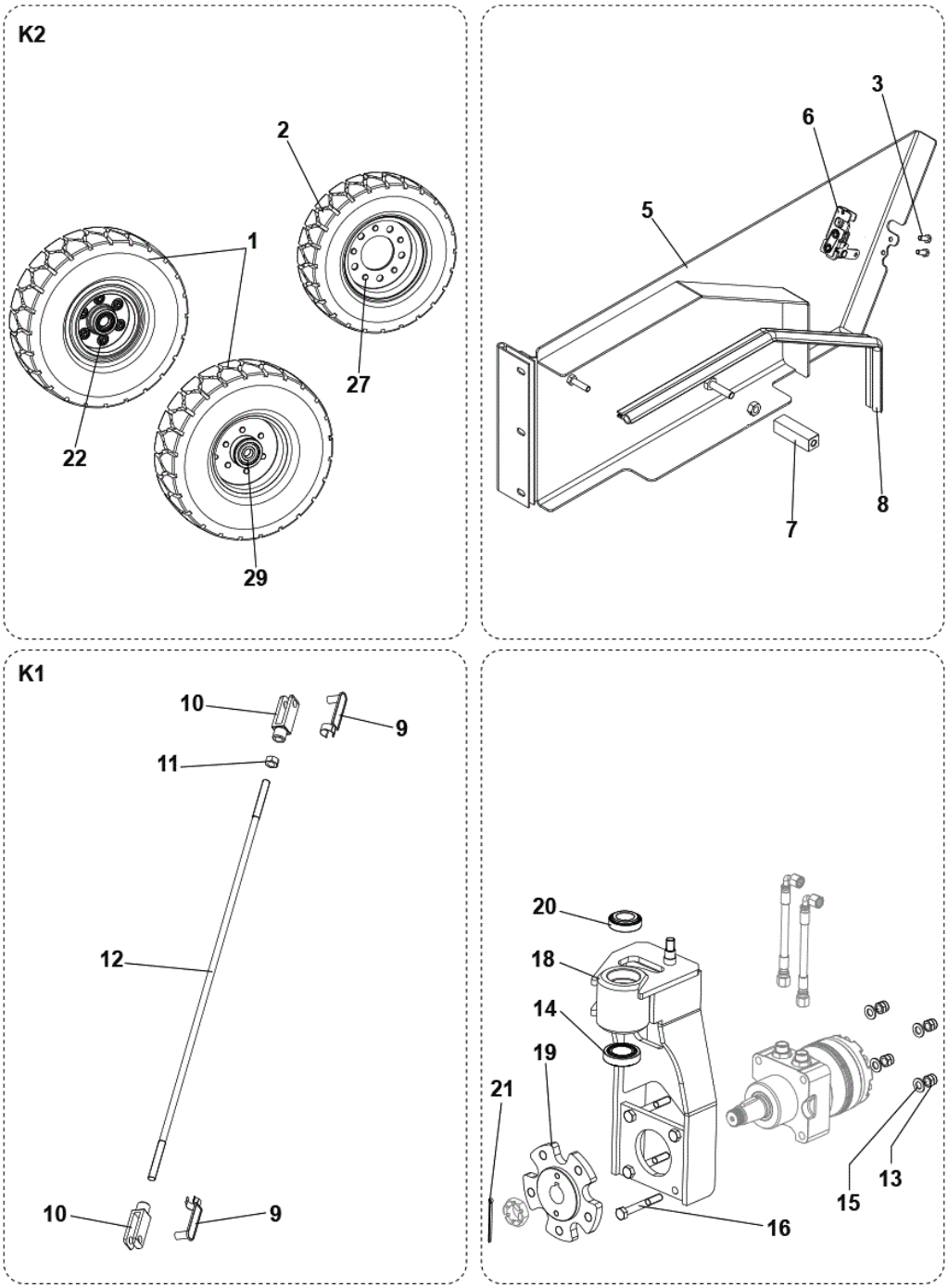
K2
2
1
27
22
29
3
6
5
8
7
K1
10
9
11
12
10
9
20
18
14
19
21
16
15
13

Pos.	Artikel-Nr.	Menge	Variante	Notes
1	33022519	1	Räder Superelastisch	[1]
2	33023124	1	WHEEL SUPERELASTIC CONTINENTAL 4.00/8SIP	[2]
2	33023371		RIM F 4.00/8 WHEEL SIP	
5	33019101	1	HATCH RIGHT KIT	[3]
7	33017128	1	STOP BROOM ARM	
8	33017129	1	Abdichtung	
14	33003175	1	Lager konisch	
18	33018792	1	SUPPORT REAR WHEEL KIT	[4]
19	33017103	1	HUB REAR WHEEL	
20	1467636000	1	BEARING TAPER ROLLER 32006 SIP	
22	33023378	2	STUD BOLT F WHEELS KIT	
27	33023369	1	STUD BOLT F WHEELS KIT	
29	33023318	2	BEARING AND SPACER F 5.00-8 WHEEL KIT	
K1	33018794	1	CONNECTION BRAKE KIT	[5]
K2	33023020	1	WHEELS SOLID KIT	
K3	33018796	1	Seitenabschluss, rechts	[6]
K4	33020413	1	Befestigungskit f.	[7]

Part Notes:

[1] - FRONT TYRE
[2] - STEARING TYRE COMPLETE
[3] - INCLUDED POS. 12-6 Chassis assembly
[4] - INCLUDED POS. 13-15-16-21
[5] - POS. 9-10-11-12
[6] - NOT SHOWN - POS. 3-6
[7] - NOT SHOWN - POS. 19 Chassis assembly - POS. 13-15-16

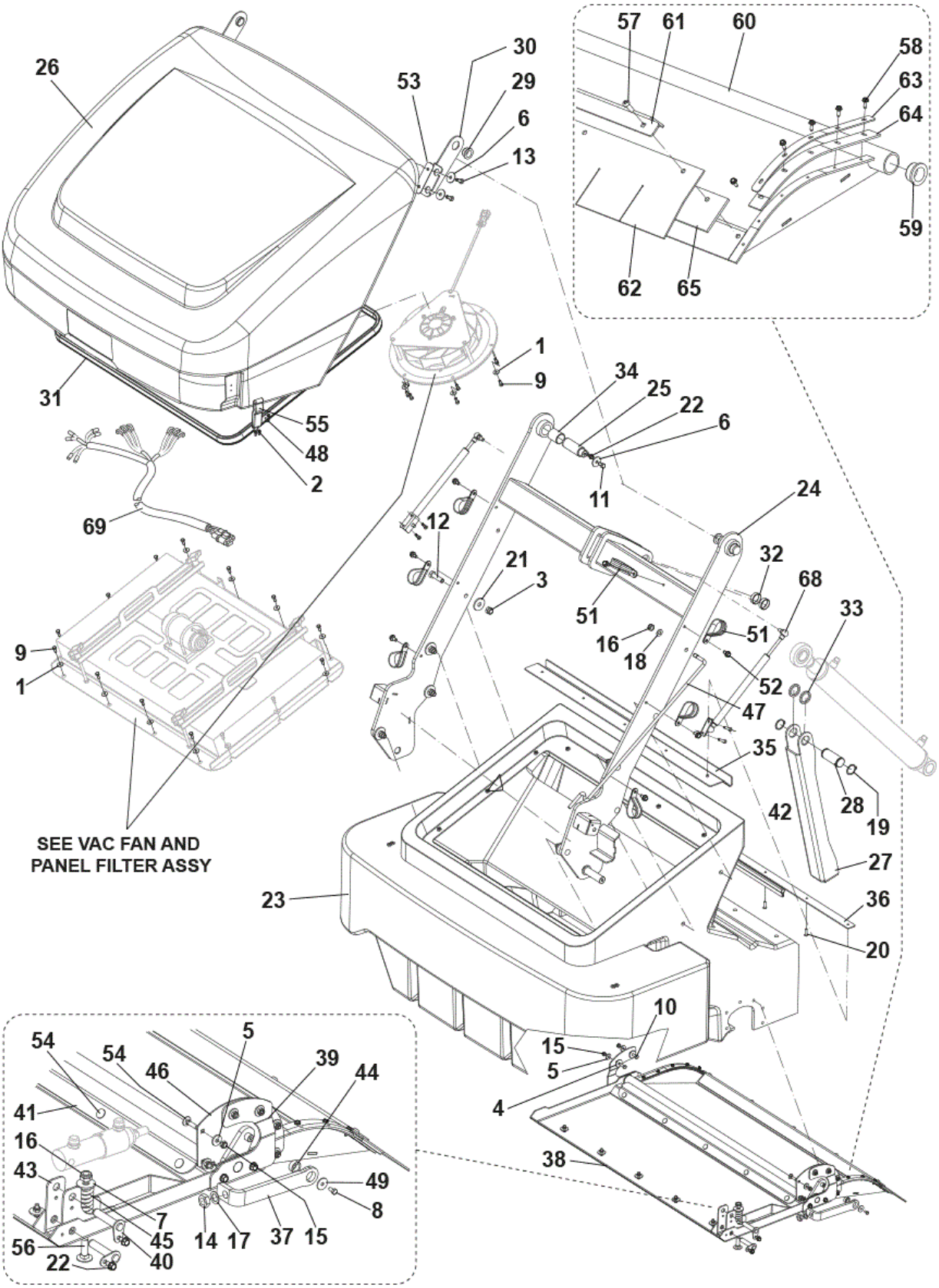
26
53
30
29
6
13
57
61
60
58
63
64
59
62
65
31
55
48
2
69
1
9
34
25
22
6
11
24
12
21
3
51
32
68
33
51
16
18
52
47
35
42
28
19
27
36
20
23
SEE VAC FAN AND
PANEL FILTER ASSY
9
1
10
15
5
4
38
54
54
46
5
39
44
41
16
43
49
8
7
45
14
17
37
15
56
22
40

Pos.	Artikel-Nr.	Menge	Variante	Notes
23	33017058	1	HOPPER WASTE PLAST. GREY	
24	33023889	1	ARM LIFTING HOPPER	
25	33017060	2	PIN HOPPER PIVOT	
26	33017061	1	COVER HOPPER MOLDED	
27	33017108	1	BAR SAFETY GALV.	
31	33023365	1	GASKET BULB RUBBER L.2930MM SIP	
37	33017137	1	ARM HOPPER DOOR	
38	33017138	1	PLATE HOPPER BUTTOM	
39	33017139	2	PIN HOPPER DOOR	
40	33017146	2	PIN	
41	33017229	1	PLATE HOPPER FLAP	
42	33017257	1	Kantenschutz	
45	33023577	1	SPRING COMPRESS. D.E.24.5 WIRE D.5.5 SIP	
46	33023734	1	BRACKET SUPPORT PIN HOPPER DOOR KIT	
53	33020011	2	PLATE OF CONTRAST	
55	56507188	2	Riegel	
59	33017116	2	BUSHING MFM 22X28X15	
60	33023168	1	HATCH WASTE CONTAINER PKD	
61	33017201	1	SKIRT STRAP DOOR	
62	33017202	1	SKIRT HOPPER DOOR	
63	33017240	2	STRAP DOOR SIDE SKIRT	
64	33017241	1	SKIRT DOOR SIDE	
68	33021975	1	GAS SPRING KIT	[1]
69	33017366	1	HARNESS HOPPER	[2]
K1	33023646	2	LATCH SOFT DRAW RUBBER KIT	[3]
K2	33019115	1	HINGES BONNET KIT	[4]
K3	33021589	1	HOSES FIXING KIT	[5]
K4	33021590	1	PLATE CONTAINER KIT	[6]
K5	33022073	1	Befestigunssatz Abdeckung	[7]
K6	33023167	1	SKIRT HATCH CONTAINER KIT	[8]
K7	33019117	1	Klappdeckeldichtungskit	[9]
K8	33020414	1	HARDWARE HOPPER BOTTOM KIT	[10]
K9	33020415	1	HARDWARE SUPPORT KIT	[11]
K10	33020334	1	Befestigungskit f.	[12]
K11	33018798	1	HARDWARE LIFTING CONTAINER KIT	[13]
K12	33018801	1	ROD F ARM HOPPER LIFTING KIT	[14]

Part Notes:

[1] - NOT SHOWN - OPTIONAL - SEE INST. INSTR. 33021977
[2] - NOT SHOWN
[3] - NOT SHOWN - POS. 2-48-55
[4] - NOT SHOWN - POS 6-13-29-30-53
[5] - NOT SHOWN - POS. 50-51-52
[6] - NOT SHOWN - POS. 20-35-36
[7] - NOT SHOWN - POS. 7-8-14-16-17-22-37-40-43-44-45-49-56
[8] - NOT SHOWN - POS. 15-58-59-54-61-62-63-64
[9] - NOT SHOWN - POS. 64-62-65
[10] - NOT SHOWN - POS. 9-17-15-12-10-5-4-29
[11] - NOT SHOWN - POS. 1-3-9-13-20-19-29
[12] - NOT SHOWN - POS. 1-3-4-5-9-10-12-13-15-17-19-20-29
[13] - NOT SHOWN - POS. 6-11-19-22-25-28-32-33-34
[14] - NOT SHOWN - POS. 16-18-47

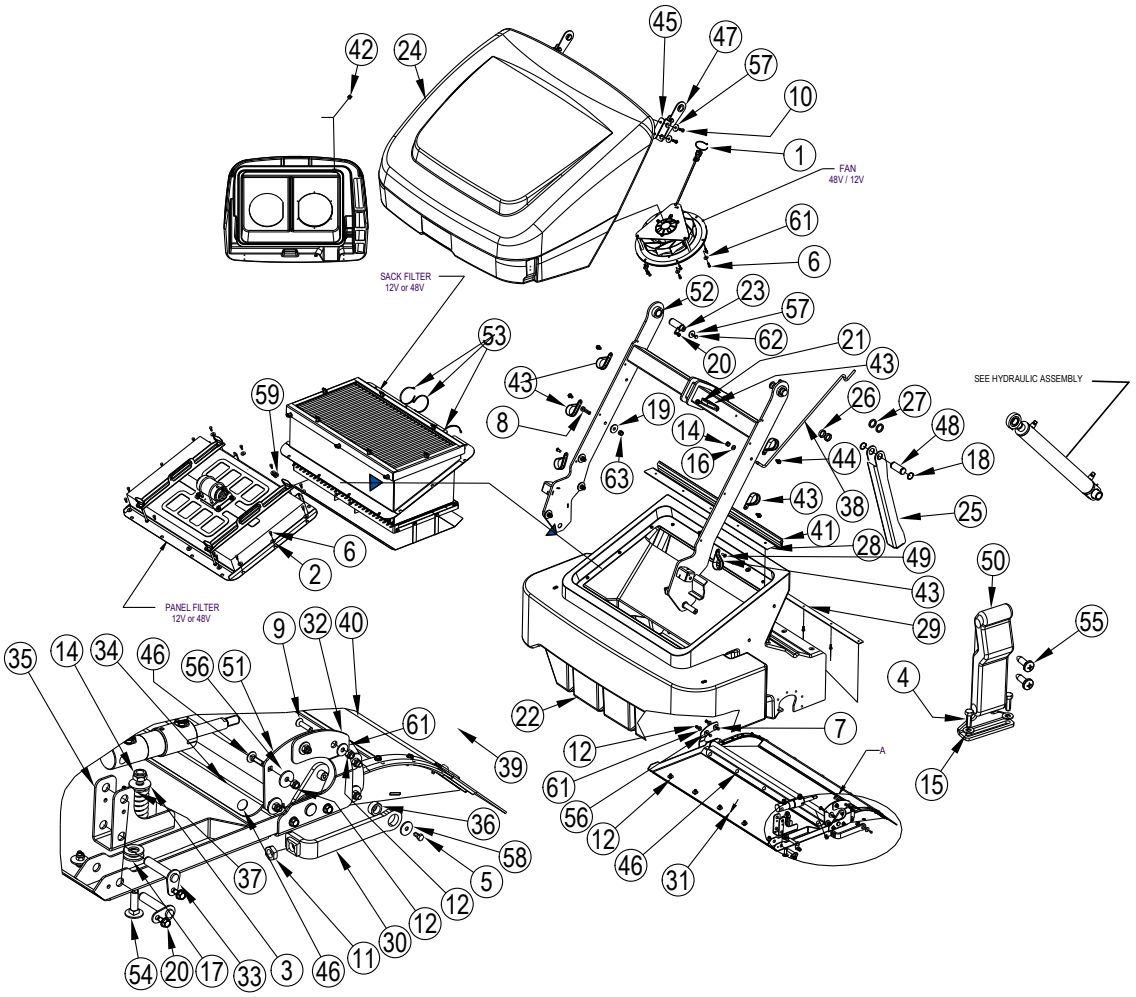
FAN
48V / 12V
SACK FILTER
12V or 48V
PANEL FILTER
12V or 48V
SEE HYDRAULIC ASSEMBLY
A

Pos.	Artikel-Nr.	Menge	Variante	Notes
1	33003511	1	TIE CABLE 2.5X98 BLACK	
2	33003742	14	WASHER PLAIN M6X20X2 DIN522 A2K	
3		1	WASHER PLAIN M10X30X2.5 ISO7093	[1]
4	33003948	4	SCREW M4X12 HEX HD F/THD ISO4017	
5		1	SCREW M5x10 HEX HD F/THD ISO4017"	[2]
6	33003974	20	Schraube M 6x16	
7	33003976	2	Schraube M6x25	
8	33004026	8	Schraube M12x45	[3]
9	33004579	3	SCREW M6X25 C/SUNK FLAT HD HEX ISO10642	
10	33005444	4	Schraube M8x20 verzinkt	
11		1	NUT HEX M12 LOW ISO4035	[2]
12	33005562	13	Mutter M6	
[13]	33005604	5	Mutter	[4]
14		2	NUT LOCK HEX M10 LOW ISO10511	[2]
15	33005911	4	WASHER PLAIN M4X9 ISO7089	
16	33005916	1	U-Scheibe M10	
17	33005918	2	U-Scheibe	
18	33006069	2	RING D 30 UNI7435	[3]
19	33016943	8	WASHER PLAIN M12X40X4 DIN522	
20		8	SCREW M6X12 HEX HD FLA THD FORM DIN7500	[2]
21	33016984	1	SCREW M8X20 HEX HD FLA THD FORM DIN7500	
22	33017058	1	HOPPER WASTE PLAST. GREY	
23	33017060	2	PIN HOPPER PIVOT	
24	33017061	1	COVER HOPPER MOLDED	
25	33017108	1	BAR SAFETY GALV.	
26	33017131	2	BEARING SLEEVE IGLIDUR QSM-3034-10	
27	33017132	2	SPACER	
28	33017134	1	PLATE HOPPER TOP	
29	33017135	1	STRAP DOOR PIVOT FLAP	
30		1	ARM HOPPER DOOR	[2]
31	33017138	1	PLATE HOPPER BUTTOM	
32	33017139	2	PIN HOPPER DOOR	
33		2	PIN	[2]
34	33017229	1	PLATE HOPPER FLAP	
35		1	BRACKET F CYLINDER GALV.	[2]
36		1	BEARING	[2]
37		1	SPRING COMPRESSION D.E.24.5 WIRE D.5.5	[2]
38	33017289	1	ROD F ARM HOPPER LIFTING	
[39]	33017366	1	HARNESS HOPPER	[4]
40	33017747	1	Flap assy	
41	33018710	1	GASKET BULB REINFORCED -SKEIN - L=0.900 M	
42	33018724	1	GASKET BULB RUBBER - L=2.930M	
43	33018762	7	CLAMP HOSE D.45	[5]
44	33019622	4	SCREW M8X16 HEX HD FLA THD FORM DIN7500	
45	33020011	2	PLATE OF CONTRAST	
46		13	SCREW M6X25 CARR. SQUARE NECK ISO8677	[1]
47	33020804	1	Bracket adjustable assembly	
48	33020852	1	PIN F SAFETY BAR	
49	33023250	2	SCREW M8X20C/SUNK FLAT HD TORX DIN 7500	
50	33023645	2	Latch soft draw rubber w/keeper assy	
51	33023733	1	BRACKET SUPPORT PIN HOPPER DOOR GALV.	
52	33023889	1	ARM LIFTING HOPPER	
53	1450524000	3	CLAMP	
54		1	SCREW M10X60 CARR. SQUARE NECK ISO8677	[2]
55	1455874000	4	SCR 4.8X16 UNI6954 THD FORM	
56	1459129000	11	WSH 6X24X2	
57	1459171000	6	WSH 8x32x2	
58		1	WASHER PLAIN M5X20 ISO7093	[2]
59	1462517000	1	CHOCKER RUBBER	

Pos.	Artikel-Nr.	Menge	Variante	Notes
[60]	9095010000	5	SCREW CYL HD M6 X 16	[4]
61	L08228600	15	U-Scheibe A6,2 A2	
62	L08274300	2	Schraube M8 x 16	[6]
63	L08601000	8	Sechskantmutter M12	[7]
K1	33022073	1	Befestigunssatz Abdeckung	
K2	33018800	1	Hebeeinrichtung, Bausatz	

Part Notes:

[1] - K1
[2] - K1 Y K2
[3] - GUARANTEE DATE EXPIRED
[4] - Not shown
[5] - PART OF MACH. NOT LAUNCH
[6] - NO LONGER AVAILABLE
[7] - STOCK COVERS GUARANTEE

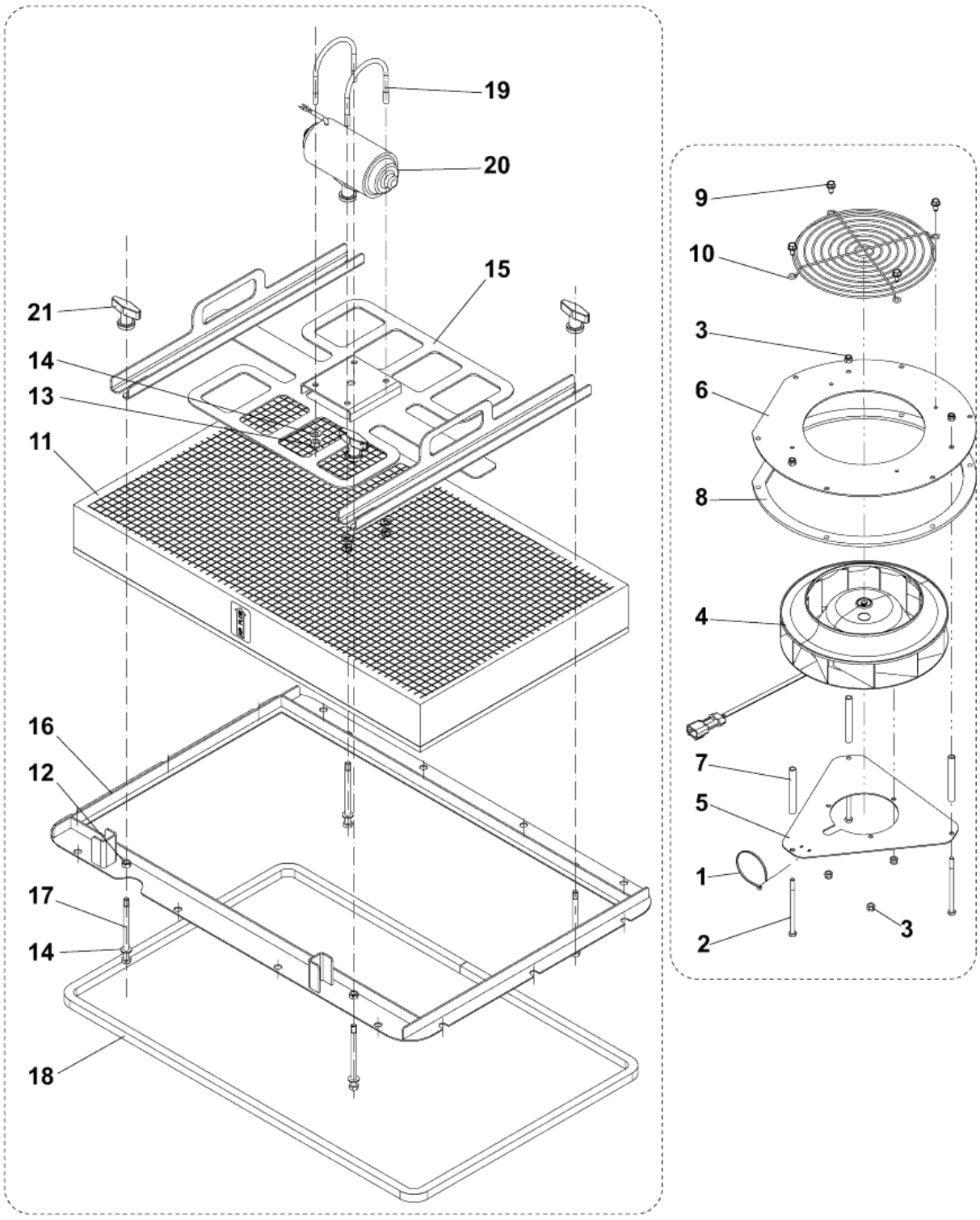
19
20
15
21
14
13
11
16
12
17
14
18
9
10
3
6
8
4
7
5
1
2
3

Pos.	Artikel-Nr.	Menge	Variante	Notes
4	33015700	1	Saugmotor 48V	
8	33023192	1	GASKET MOTOR VACUUM SIP	
11	8-24-04139-1	1	Kassettenfilter, Ultra-Gewebe, Zellulose	
11	56382789	1	Kassettenfilter Polyester	[1]
15	33023576	1	PLATE FILTER SHAKER KIT	
16	33017119	1	Rahmen f. Filter	
18	33018634	1	Abdichtung Filter	
20	33017232	1	Rüttelmotor 48V	
21	9098257000	4	Flügelmutter	
22	33021181	1	GASKET U SHAPED PVC L.170MM PKD	
K1	33018804	1	FIXING ELECTROFAN KIT	[2]
K2	33018805	1	GRILL ELECTROFAN KIT	[3]
K3	33020335	1	Filtergestellkit	[4]
K4	33019259	1	ANTISTATIC KIT	[5]

Part Notes:

[1] - OPTIONAL
[2] - NOT SHOWN - POS. 1-2-3-5-6-7
[3] - NOT SHOWN - POS. 9-10
[4] - NOT SHOWN - POS. 12-13-14-17-19
[5] - NOT SHOWN - SEE INST. INSTR. 33019261 - SEE TSB IT 2010-046

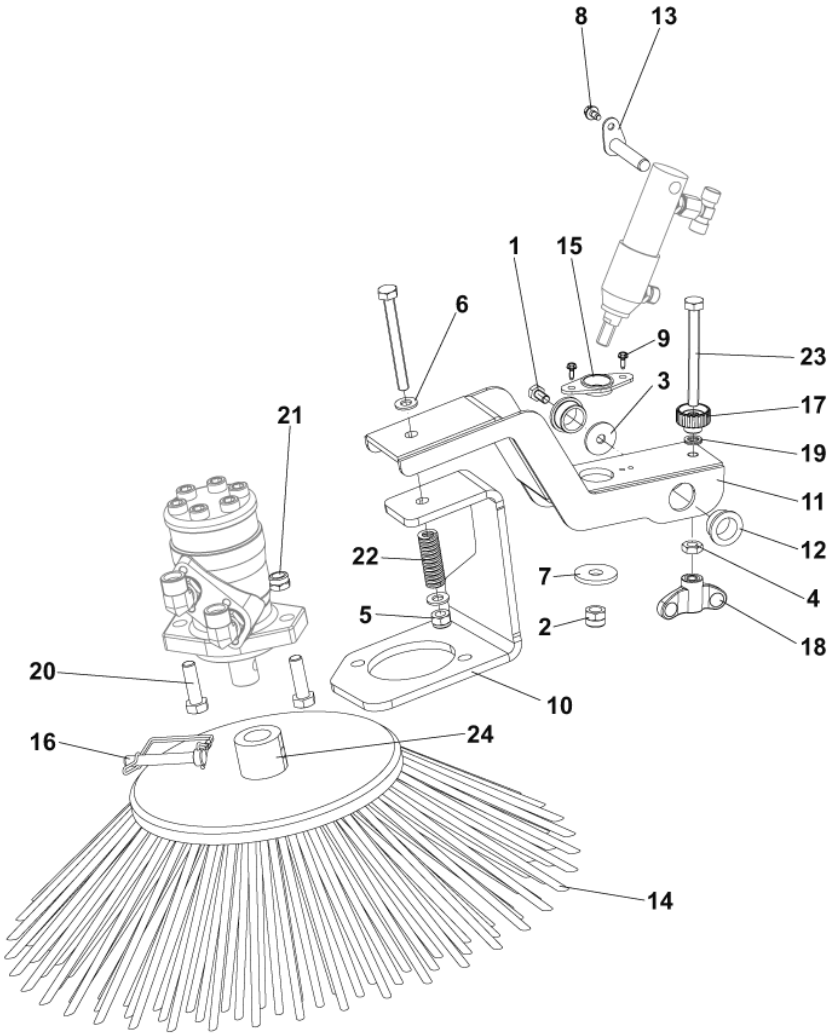
8
13
1
15
6
9
23
3
17
21
19
11
22
12
7
4
5
2
18
20
10
16
24
14

Pos.	Artikel-Nr.	Menge	Variante	Notes
10	33017107	1	Halterung f. Seitenbesen-	
11	33017115	1	Arm f. Seitenbesen	
14	33021313	1	Seitenbesen PPL	
14	33017255	1	Seitenbesen PP 1,5/ 260x550 mm	
14	33018889	1	Seitenbesen Stahlmix/PP, 260x550 mm	[1]
14	33023366	1	BROOM SIDE 260X550 NYLON	[1]
16	1467070000	1	BOLZEN D.10 BÜRSTE M. CLIP PKD	
17	33017889	1	KNOB M10	
18	33018333	1	Flügelmutter M10	
22	146 1317 000	1	Feder SR 1500 HD	
24	33020628	1	Buchse für Seitenbesen	
K1	33020336	1	HARDWARE SUPPORT KIT	[2]
K2	33020337	1	HARDWARE CYLINDER SIDE BROOM KIT	[3]
K3	33020338	1	HARDWARE SETTING SIDE BROOM KIT	[4]

Part Notes:

[1] - OPTIONAL
[2] - NOT SHOWN - POS. 4-5-6-20-21-22
[3] - NOT SHOWN - POS. 2-7-8-9-13-15
[4] - NOT SHOWN - POS. 1-3-7-12-17-18-19-23

equipped on SR 1601 MAXI

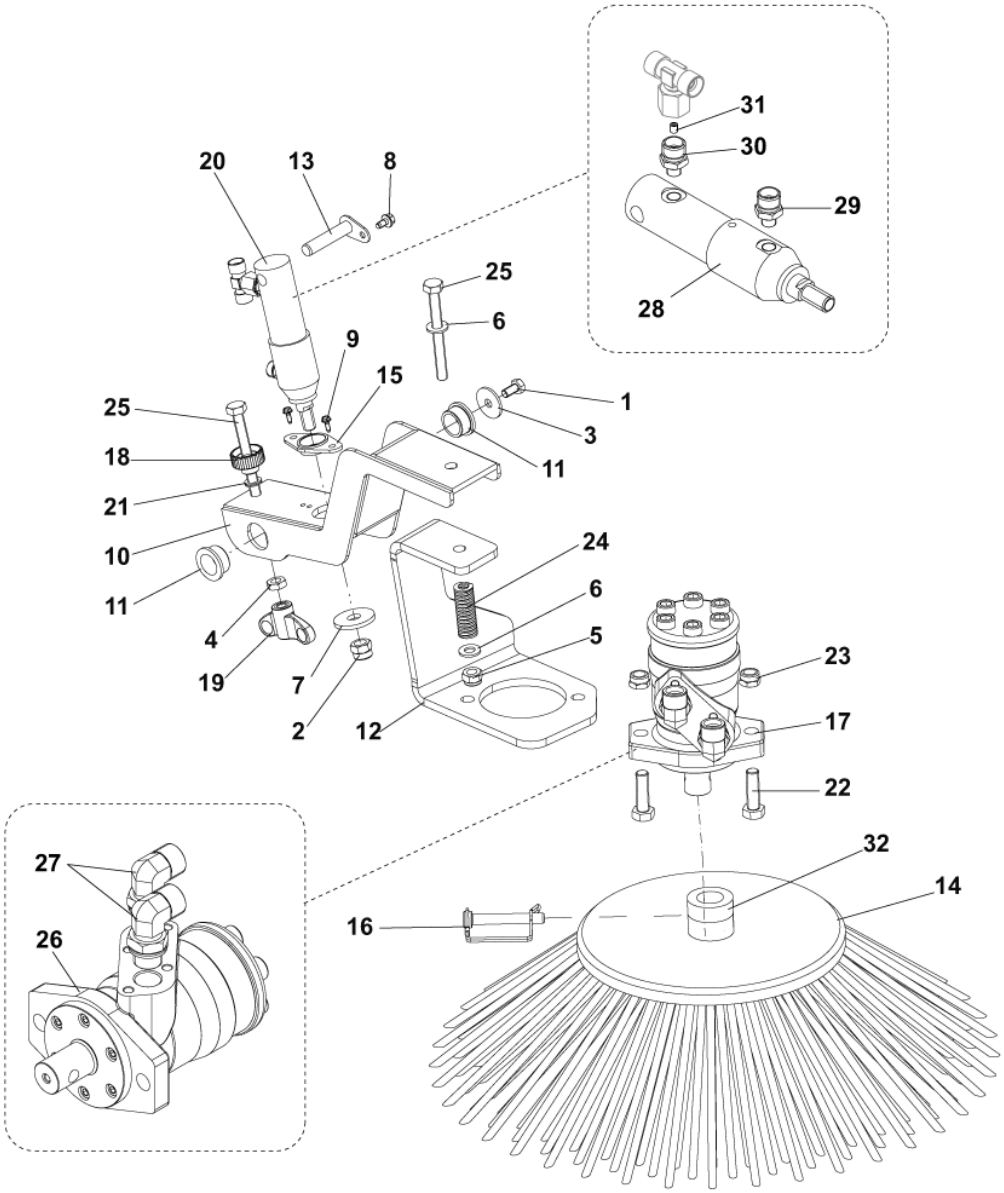

Pos.	Artikel-Nr.	Menge	Variante	Notes
10	33017115	1	Arm f. Seitenbesen	
12	33017117	1	Halterung f. Seitenbesen	
14	33021313	1	Seitenbesen PPL	
14	33017255	1	Seitenbesen PP 1,5/ 260x550 mm	
14	33018889	1	Seitenbesen Stahlmix/PP, 260x550 mm	[1]
14	33023366	1	BROOM SIDE 260X550 NYLON	[1]
16	1467070000	1	BOLZEN D.10 BÜRSTE M. CLIP PKD	
17	33018807	1	Seitenbesenmotor	
18	33017889	1	KNOB M10	
19	33018333	1	Flügelmutter M10	
20	33021766	1	SIDE BROOM LEFT CYLINDER KIT	
24	146 1317 000	1	Feder SR 1500 HD	
26	33023898	1	GASKETS HYD. MOT. OLEOTECNO.KIT	
26	33017003	1	MOTOR SIDE BROOM	
26	33020754	1	GASKETS HYDRAULIC MOT.KIT	[2]
27	33015874	2	ELBOW 90 M1/2	
28	33021255	1	Zylinder	
28	33022009	1	GASKET MICRO CYLINDER 16/25/50 KIT	[3]
29	33018375	1	Anschluss 1/8	
30	33018222	1	Anschluss 1/8	
31	33018215	1	Stift M5x6 Diam. 0.5	
32	33020628	1	Buchse für Seitenbesen	
K1	33019173	1	Seitenbesen-Set, PP, links	[4]
K2	33020336	1	HARDWARE SUPPORT KIT	[5]
K3	33020337	1	HARDWARE CYLINDER SIDE BROOM KIT	[6]
K4	33020338	1	HARDWARE SETTING SIDE BROOM KIT	[7]

Part Notes:

[1] - OPTIONAL
[2] - For item 33017003
[3] - For item 33021255
[4] - NOT SHOWN - OPTIONAL - SEE INST. INSTR. 33018767
[5] - NOT SHOWN - POS. 4-5-6-21-23-25
[6] - NOT SHOWN - POS. 2-7-8-9-13-15
[7] - NOT SHOWN - POS. 1-3-7-11-18-19-23

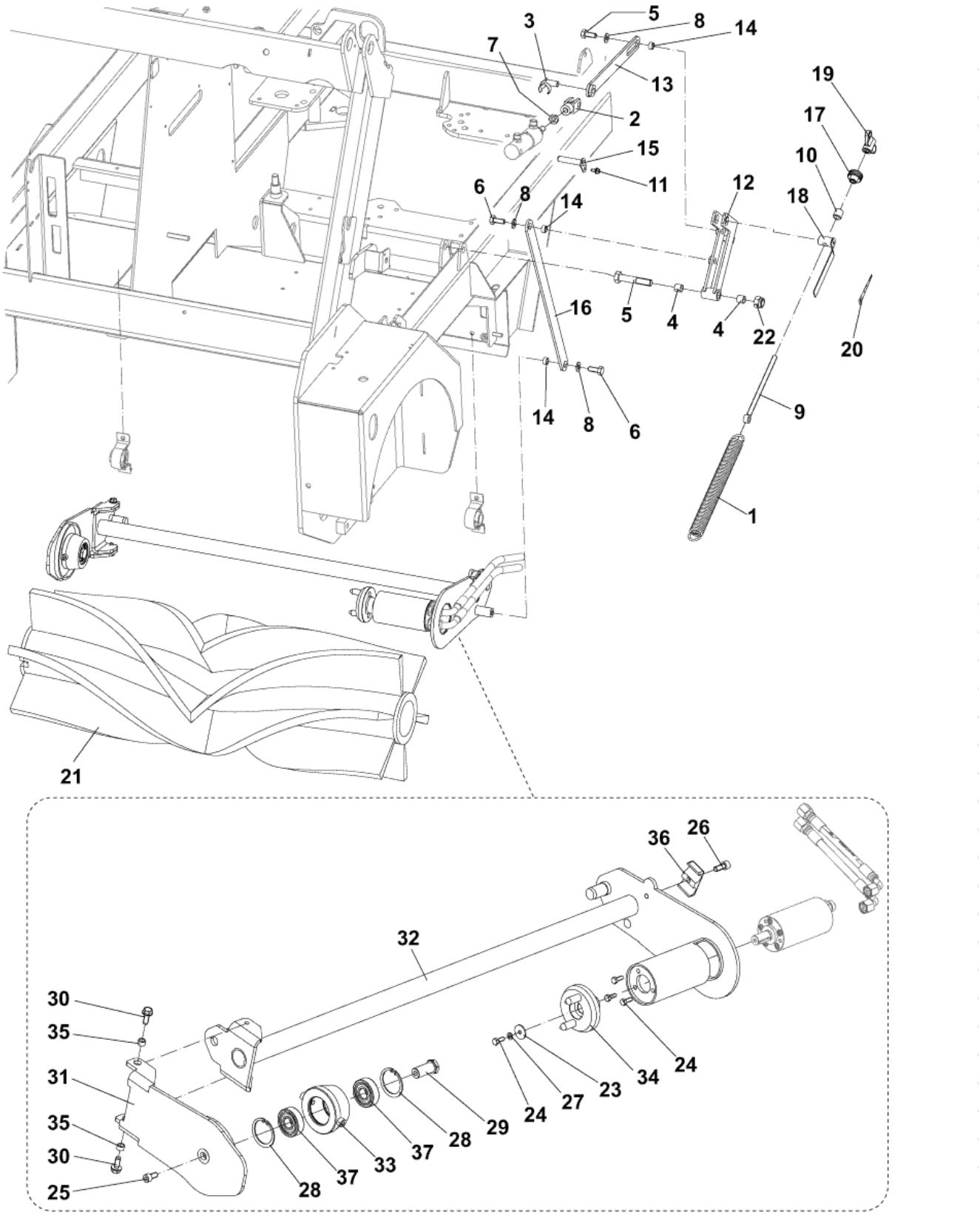
3
5
8
14
7
13
19
2
17
15
10
11
12
6
8
14
18
16
5
4
4
22
20
14
8
6
9
1
21
36
26
32
30
35
31
35
30
25
28
37
33
37
28
29
24
27
23
34
24

Pos.	Artikel-Nr.	Menge	Variante	Notes
1	33002106	1	Federspanner Kit	
21	33018853	1	Kehrwalze V-Form PP 0,7/ 310x900 mm	
21	33018852	1	Kehrwalze V-Form Nylon/ 310x900 mm	[1]
21	33018854	1	Kehrwalze Stahlmix/PP 0,7/ 310x900 mm	[1]
21	33018855	1	Kehrwalze V-Vorm	[2]
31	33017007	1	Besenarm	
32	33023483	1	Halter Hauptbesen	
33	33017140	1	Nabe	
34	33017141	1	Nabe	
37	33023722	2	BEARING BALL 6303 2RS DOUBLE LIP SIP	
38	33023484	1	SUPPORT MOTOR KIT	[3]
39	33023721	1	HUB AND BEARING BALL KIT	[4]
40	33018865	1	PLATE MAIN BROOM KIT	[5]
41	33018868	1	Hauptkehrwalzantrieb Kit	[6]
42	33018867	1	Federspanner Kit	[7]
43	33018869	1	LEVER F MAIN BROOM LIFTING KIT	[8]

Part Notes:

[1] - Optional

[2] - Optional
see PI 2014-003 TTY

[3] - NOT SHOWN (Pos 30-31-32-35-26-36)

[4] - NOT SHOWN (Pos 25-37-23-24-27-28-29-33-34)

[5] - NOT SHOWN (Pos 2-3-6-8-7-15-13-14-11)

[6] - NOT SHOWN (Pos 12-22-5-4)

[7] - NOT SHOWN (Pos 9-10-17-18-19-20)

[8] - NOT SHOWN (Pos 16-6-8-14)

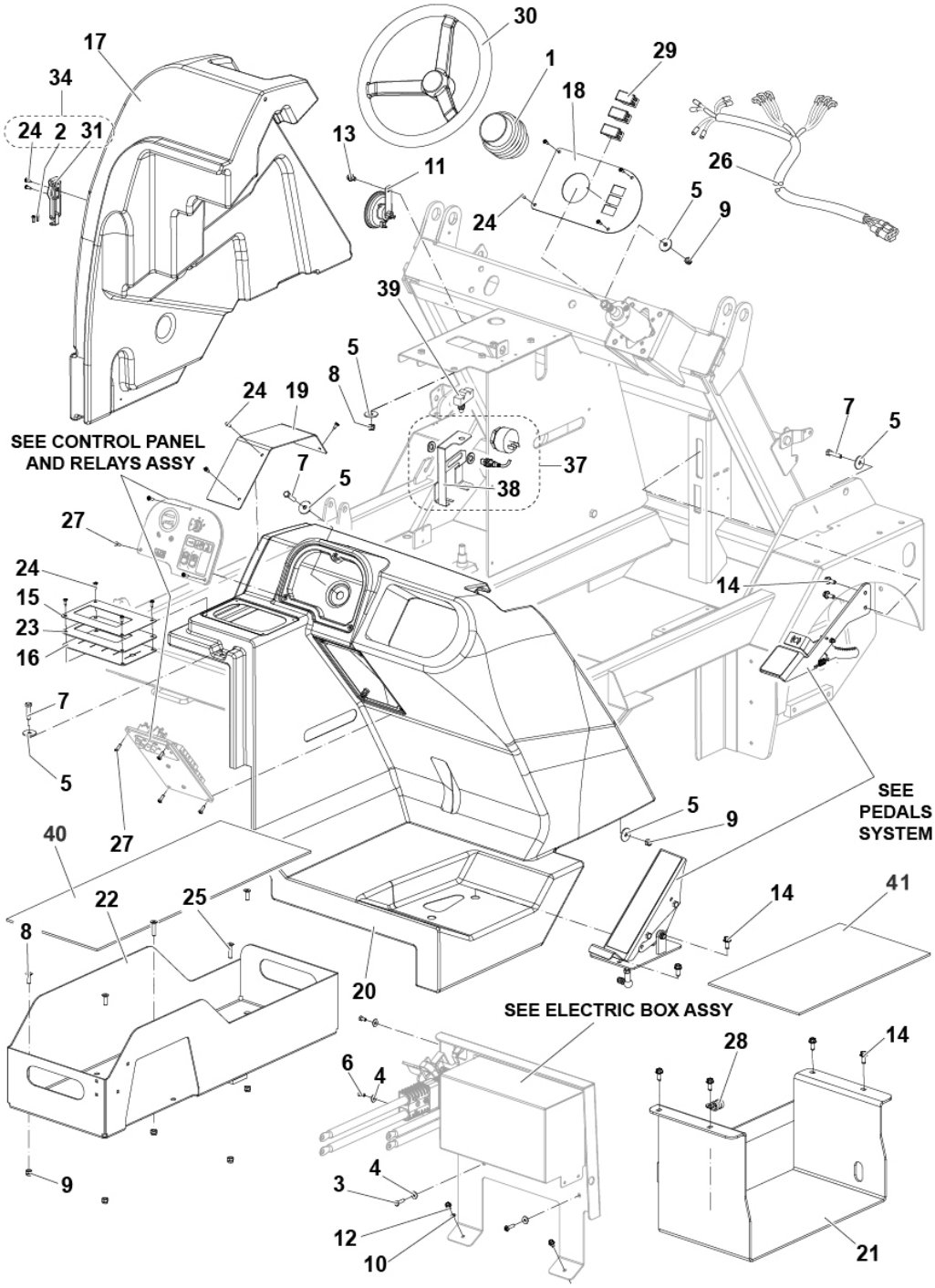
30
17
34
1
29
18
24 2 31
13
11
26
5
9
24
39
5
8
24 19
7
5
SEE CONTROL PANEL
AND RELAYS ASSY
37
38
7
5
27
24
15
23
16
14
7
5
27
5
9
SEE
PEDALS
SYSTEM
40
22
25
14
41
8
20
SEE ELECTRIC BOX ASSY
6
4
28
14
4
3
12
10
9
21

Pos.	Artikel-Nr.	Menge	Variante	Notes
1	8-33-02360	1	HOSE- HEAT SHIELD	
11	33009017	1	Horn 48V	
15	33017053	1	DECAL DISTRIBUTOR	
16	33017164	1	FLAP LEVER COVER	
17	33017169	1	COVER SIDE PLASTIC GREY	
17	33021154	1	WASSERTANK KIT	[1]
18	33017224	1	COVER PLATE NON TILT STEERING WHEEL	
19	33017246	1	PLATE F HOOD MET.	
20	33017256	1	CONSOLE PLASTIC GREY	
21	33023456	1	SUPPORT TRACTION BATTERY KIT	[2]
22	33017264	1	SUPPORT LEFT	
23	33017291	1	PLATE MANIFOLD BATT MACH	
26	33017376	1	HARNESS MACHINE BATTERY	
28	1466345000	1	CLIP RUBBER PIPE RETAINING D12 3 PCS SET	
29	909 5836 000	3	Druckkappe	
30	33018170	1	STEERING WHEEL	
31	56507188	1	Riegel	
K1	33023646	1	LATCH SOFT DRAW RUBBER KIT	[3]
K2	33020341	1	HARDWARE CONTROL LEFT KIT	[4]
K3	33020342	1	HARDWARE-KONTROLL-RECHTS-KIT	[5]
37	33022643	1	BUZZER REVERSE GEAR BATTERY KIT	[6]
38	33022404	1	BRACKET FOR SENSOR BATTERY VERSION	[7]
39	1466507000	1	MICROSWITCH 10A 250V PKD	
40	33020545	1	MAT BATTERY LEFT	
41	33020544	1	MAT BATTERY RIGHT	

Part Notes:

[1] - FOR MAXI VERSION ONLY

[2] - ACCESSORY PRUNING 2020
SEE INST. INTR. 33023455

[3] - Q.TY 2 - POS. 31-2-24

[4] - NOT SHOWN - POS. 24-14-13-9-7-5-2

[5] - NOT SHOWN - POS. 27-25-24-14-13-12-10-9-8-7-6-5-4-3-2

[6] - INSTALLATION INSTRUCTION: 33019168
SEE TSB-FC-2013-148

[7] - UP TO S/N 38100134500024 - CODE 33022405 NO MORE AVAILABLE SEE TSB FC 2013-148

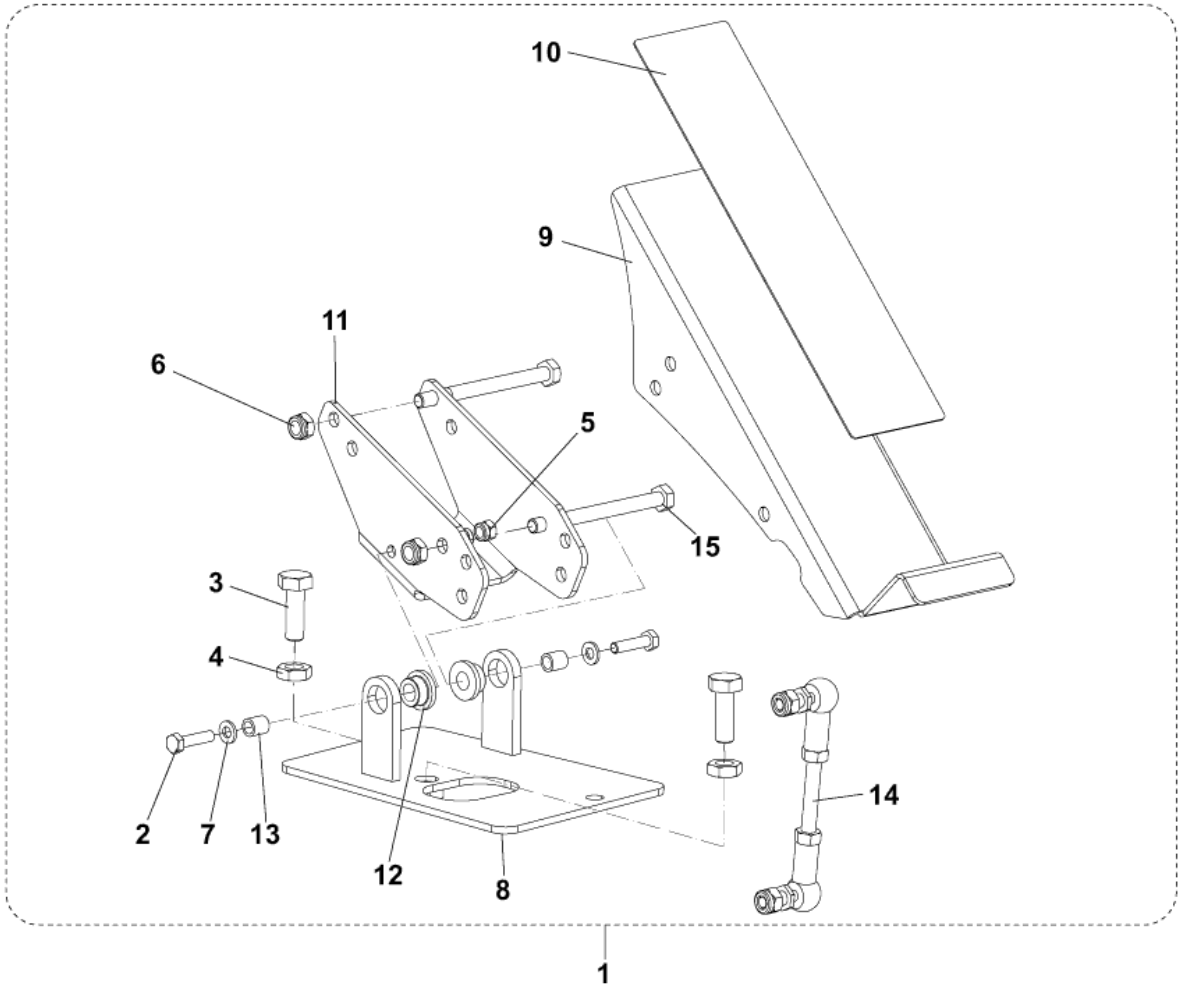
10
9
11
6
5
15
3
4
2
7
13
12
8
14
1

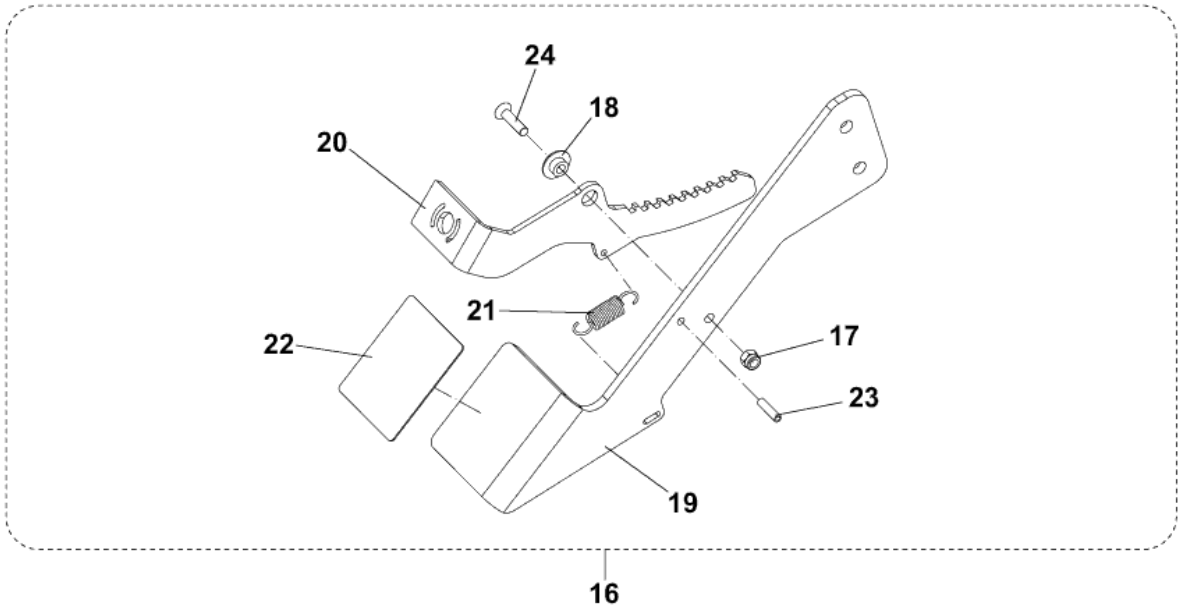
24
18
20
21
22
17
23
19
16

Pos.	Artikel-Nr.	Menge	Variante	Notes
1	33018841	1	Fußpedal Kit	
8	33017203	1	MOUNT WELDED PEDAL	
9	33017204	1	FOOT PEDAL UPPER	
10	33017205	1	MAT PEDAL	
11	33017206	1	FOOT PEDAL LOWER	
12	33017216	2	BEARING FLANGE IGLIDUR MFM-1016-10	
13	33017217	2	BUSHING	
14	33018842	1	CONNECTION PEDAL KIT	
16	33018845	1	Bremspedal Kit	
18	33017178	1	BUSH	
19	33017197	1	PEDAL BRAKE MET.	
20	33017198	1	PARKING BRAKE LEVER	
21	33017199	1	Federspanner Kit	
22	33017259	1	MAT PEDAL	
K1	33020416	1	HARDWARE ACC. PEDAL KIT	[1]

Part Notes:

[1] - NOT SHOWN - POS. 15-13-12-7-6-5-4-3-2

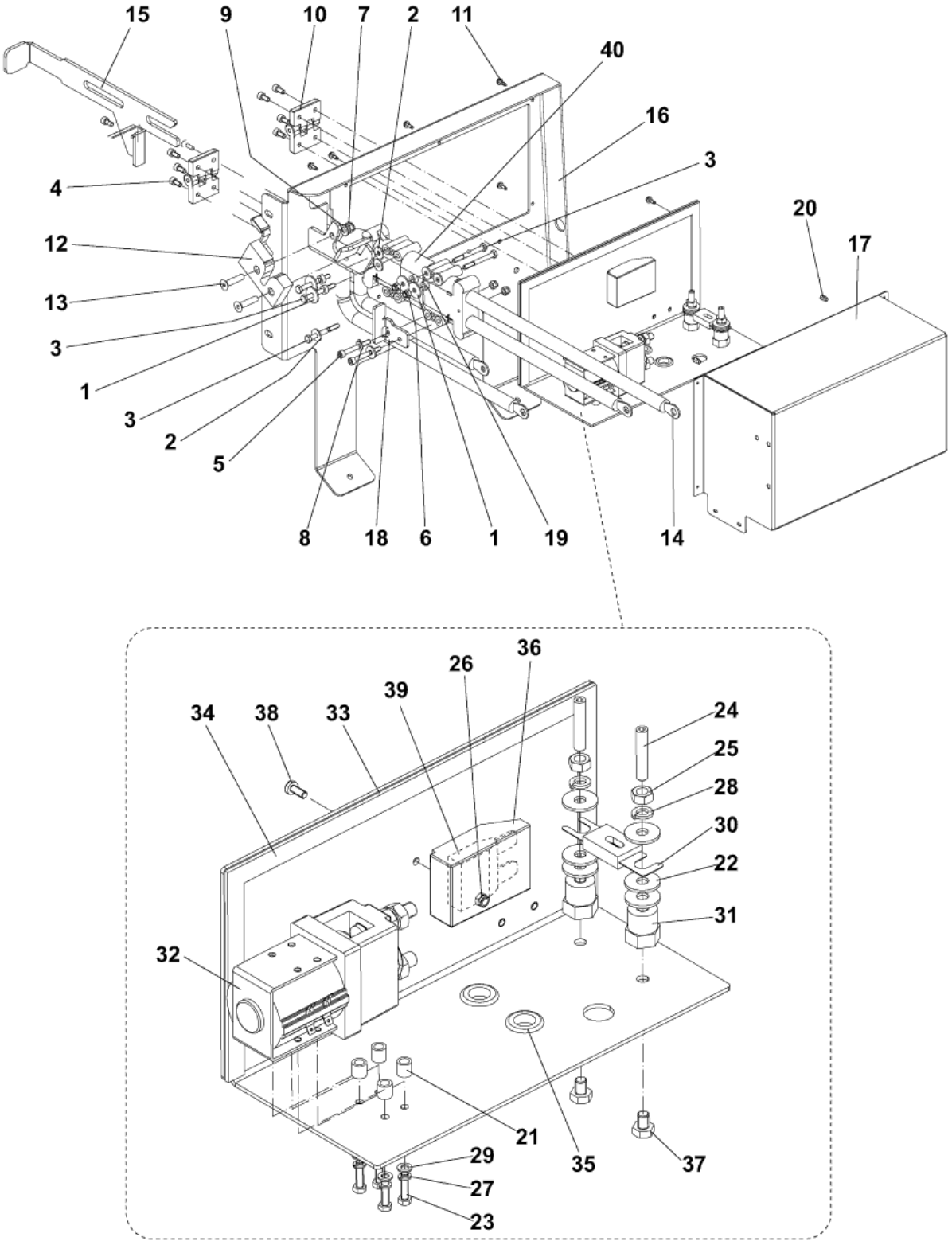
15
9
10
7
2
11
40
16
3
4
20
17
12
13
3
1
3
2
5
8
18
6
1
19
14
36
26
39
34
38
33
24
25
28
30
22
31
32
21
29
27
23
35
37

Pos.	Artikel-Nr.	Menge	Variante	Notes
10	33009531	2	Scharnier	
12	33017176	1	LATCH SLAM	
14	33023690	1	HARNESS BATT.AND EL.COMPONENTS EU SIP	
15	33017393	1	PLATE	
16	33017680	1	PLATE LEG PROTECTION	
17	33017683	1	BOX ELECTRIC MET.GREY	
18	33020297	1	Halterung	
30	33008583	1	POWER FUSE 250A	
31	33017365	2	ISOLATOR M8	
32	33017449	1	CONTACTOR UNIPOLAR 48V	
33	33017681	1	COVER	
34	33018876	1	GASKET ADHESIVE 15X5 L.650MM SIP	
36	146 0659 000	1	Sicherungshalter gross	
39	909 5101 000	1	FUSE 30A	
40	33023729	1	CONNECTOR 320A BLUE SIP	
K1	33018861	1	BLOCK BONNET KIT	[1]
K2	33020449	1	HARDWARE ELECTRIC BOX KIT	[2]

Part Notes:

[1] - NOT SHOWN - POS. 12-9-7-18-21-2 Rear cover assy - POS. 12-13

[2] - NOT SHOWN - POS. 1-2-3-4-5-6-7-8-9-11-13-19-20-21-22-23-24-25-26-27-28-29-35-37-38

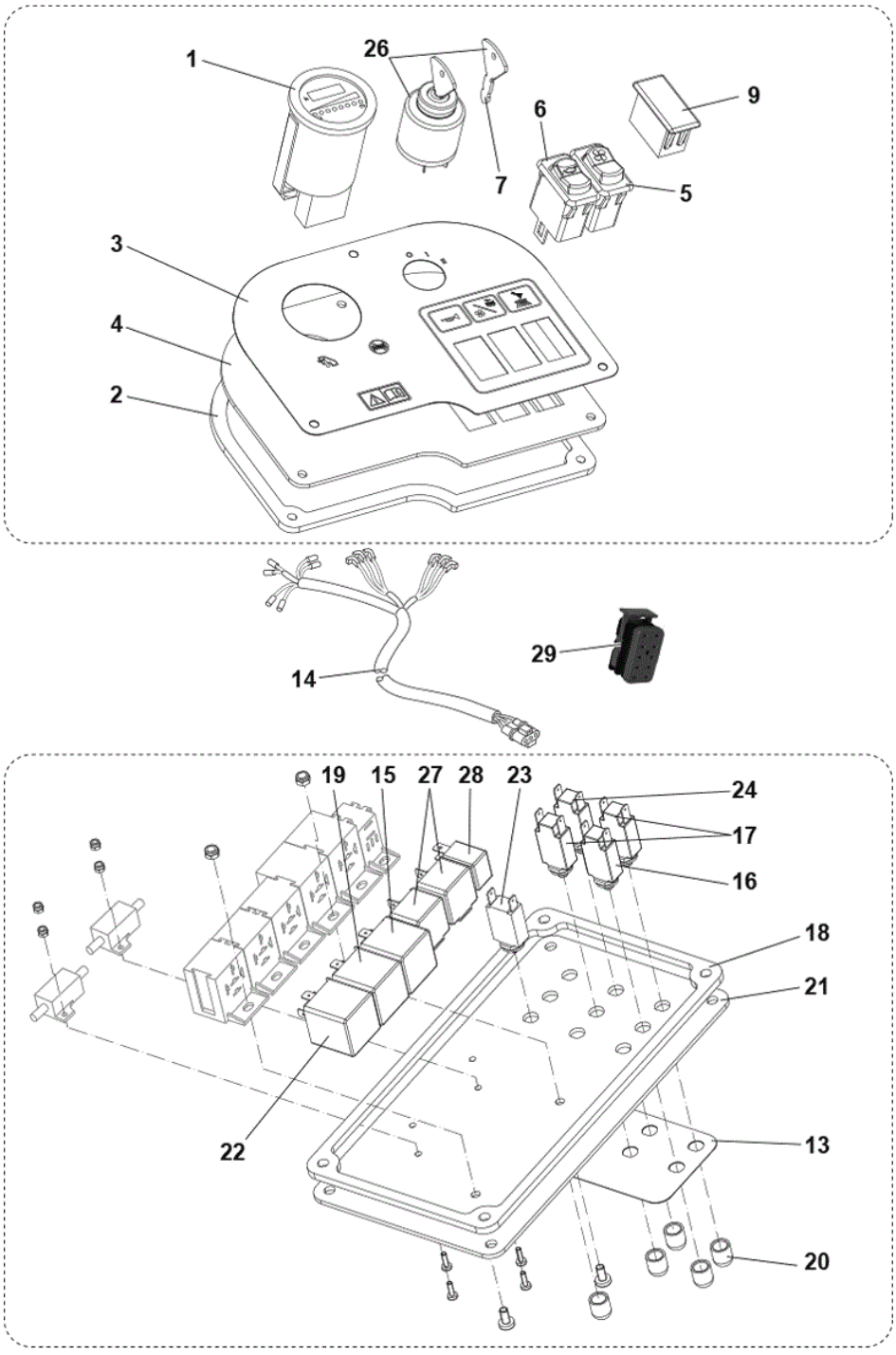
1
26
9
6
7
5
3
4
2
14
29
19
15
27
28
23
24
17
16
18
21
22
13
20

Pos.	Artikel-Nr.	Menge	Variante	Notes
1	33023308	1	GAUGE 48V KIT	
2	33017223	1	GASKET PLATE	
3	33017375	1	DECAL CONTROL PANEL	
4	33017377	1	PLATE SWITCH PANEL BATTERY	
5	33018843	1	Schalterkit	
6	33018844	1	SWITCH HORN KIT	
7	1467014000	1	KEY F STARTER SWITCH 2 PCS SET	
9	909 5836 000	1	Druckkappe	
13	33017249	1	DECAL FUSES	
14	33017356	1	Batterierelaiskabel	
15	1466193000	1	RELAY TIMER 20 SECONDS PKD	
16	33017360	1	Sicherung 16A	
17	33023236	2	CIRCUIT BREAKER 10A PKD	
18	33017381	1	GASKET F PLATE RELAYS SUPPORT	
19	1466194000	1	RELAY TIMER 0.5 SEC. PKD	
20	33017386	5	BOOT CIRCUIT BREAKER	
21	33017414	1	PLATE SWITCH PANEL	
22	1466196000	1	RELAY TIMER 0.5 SECONDS PKD	
23	33020276	1	CIRCUIT BREAKER 3A	
24	33020282	1	CIRCUIT BREAKER 5A	
26	33020442	1	Schlüsselschalter	
27	909 6622 000	2	Relais 24 V 40 A	
28	146 1646 000	1	RELAY 24V	
29	33017330	1	CONNECTOR CPL F SWITCH	

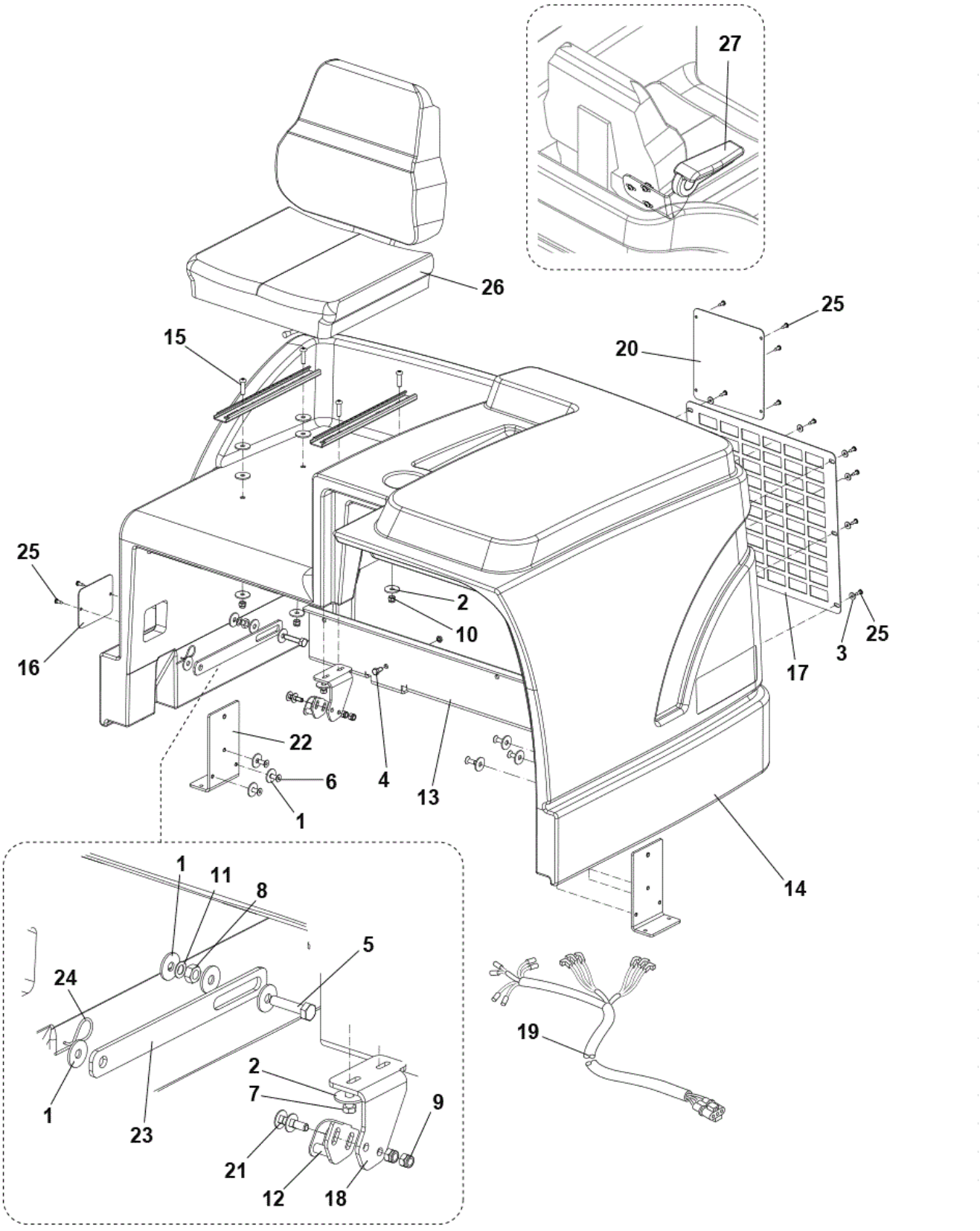
27
26
15
25
20
25
16
2
10
3
25
17
22
6
4
13
1
14
1
11
8
5
24
2
7
9
1
23
21
12
18
19

Pos.	Artikel-Nr.	Menge	Variante	Notes
12	33017177	1	CATCH LATCH	
13	33017213	1	BRACKET HINGE MET. GREY	
14	33017230	1	ABDECKUNG HECKMOTOR PLAST. GRAU	
16	33017245	1	PLATE SIDE SMALL BATTERY	
17	33017247	1	GRILL REAR	
18	33017261	1	PLATE CATCH	
19	33017357	1	HARNESS REAR COVER BATTERY	
20	33017368	1	PLATE SMALL BATTERY	
22	33018685	2	BRACKET FOR STOP COVER	
23	33018687	2	LEVER F STOP REAR BONNET	
26	1467028000	1	SEAT PKD	
27	33019556	1	Armlehne-Set rechts	[1]
28	33019554	1	Sicherheitsgurt-Set	[2]
29	33018862	1	BONNET BLOCK KIT	[3]
30	33019103	1	REINFORCEMENT BONNET KIT	[3]
31	33020340	1	HARDWARE REAR COVER KIT	[4]

Part Notes:

[1] - OPTIONAL
[2] - NOT SHOWN - OPTIONAL
[3] - NOT SHOWN
[4] - NOT SHOWN - POS. 1-2-3-4-5-6-7-8-9-10-11-15-21-24-25

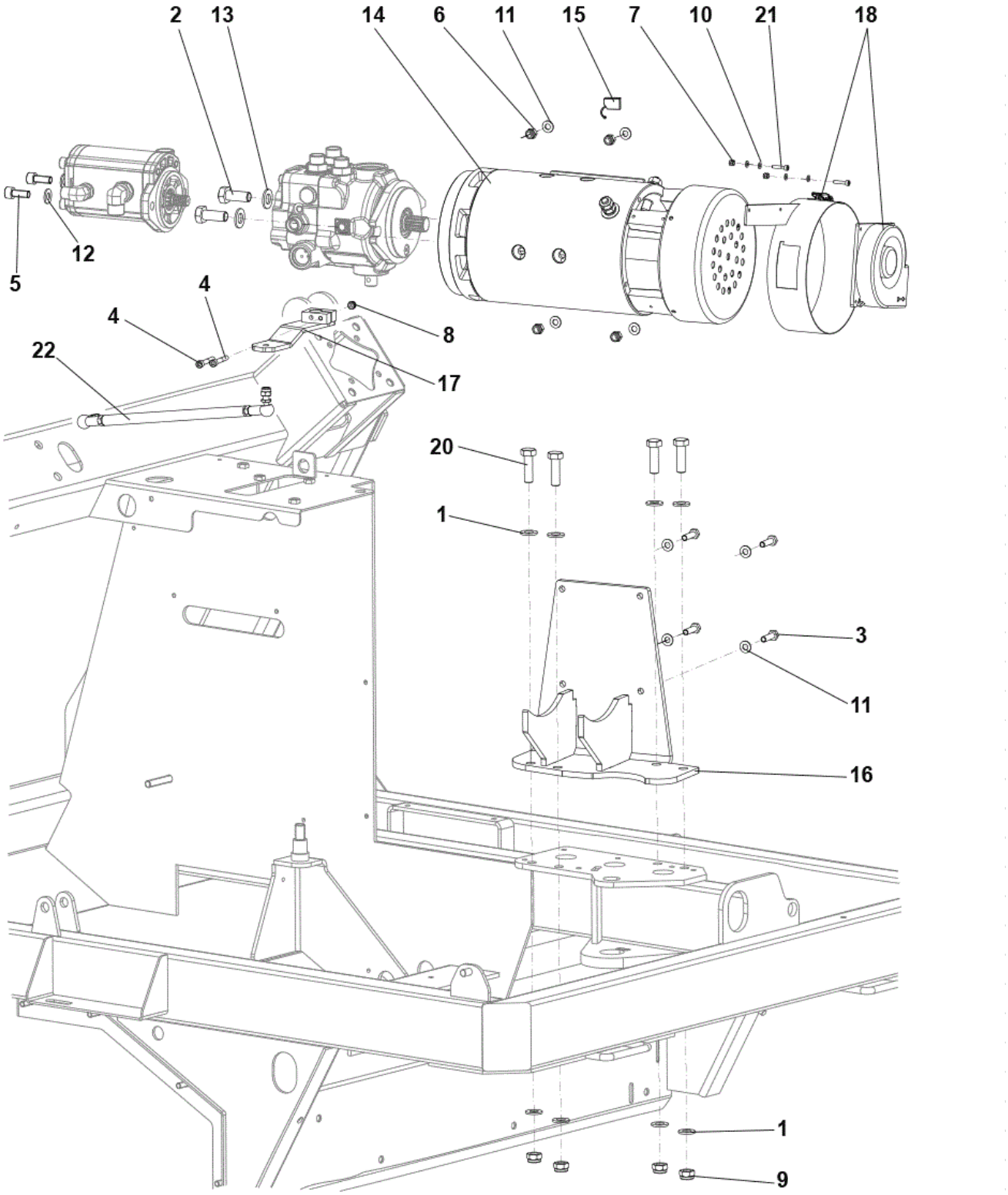

Resource notes:

POSITION 14. 33017260 IS GOING OUT OF STOCK IT WILL BE REPLACED BY POSITION 5. 33022549
POSITION 15 33019625 VALID FOR MOTOR 33017260 POSITION 15 33022548 VALID FOR MOTOR 33022549

Pos.	Artikel-Nr.	Menge	Variante	Notes
14	33022549	1	MOTOR ELECTRIC AND CABLE EXTENSION KIT	
15	33022548	1	CARBON BRUSH 8 PCS SET	
15	33019625	1	CARBON BRUSH 4 PCS SET	[1]
16	33017364	1	SUPPORT MOTOR ELECTRIC 48V	[2]
16	33023028	1	SUPPORT MOTOR ELECTRIC 48V KIT	[3]
17	33017382	1	LEVER PUMP BATTERY	[4]
18	33023036	1	FAN COOLING MOTOR ELECTRIC KIT	[5]
22	33022170	1	CONNECTION PEDAL BATTERY KIT	[3]
23	33020450	1	HARDWARE ELECTRIC MOTOR KIT	[6]

Part Notes:

[1] - STOCK COVERS GUARANTEE

Only for motor Ref. No. 33017260

[2] - NO LONGER AVAILABLE

[3] - STARTING FROM S/N 3810114600047

[4] - NO LONGER AVAILABLE
UNTIL S/N 3810114600046

[5] - NO LONGER AVAILABLE

Only for motor Ref. No. 33017260

[6] - NOT SHOWN - POS. 1-2-3-4-5-6-7-8-9-10-11-12-13-20-21

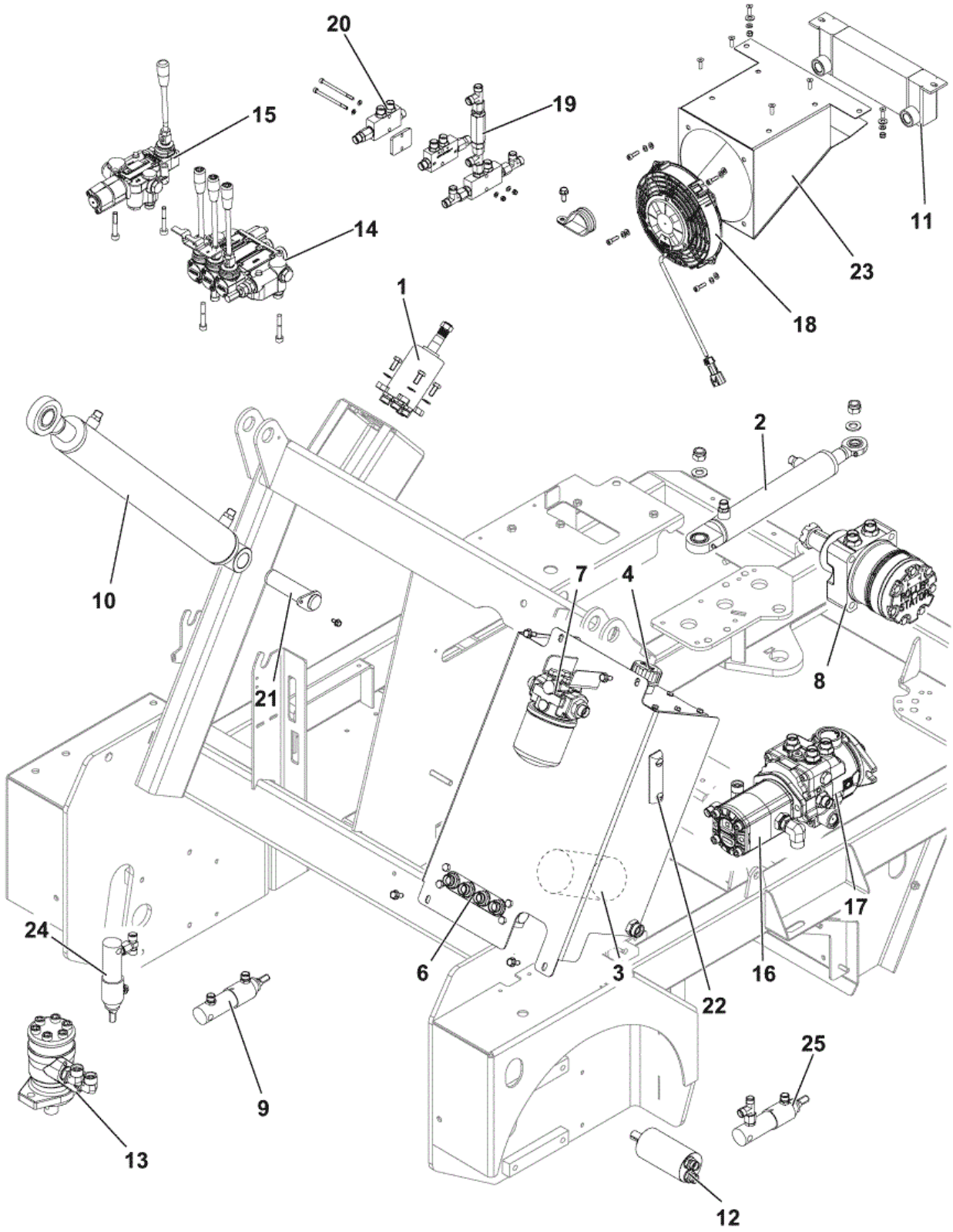
20
15
19
14
11
23
18
1
2
10
7
4
8
21
17
24
6
3
16
22
25
9
13
12

Pos.	Artikel-Nr.	Menge	Variante	Notes
1	33022292	1	STEERING UNIT KIT	[1]
1	33022286	1	STEERING UNIT HYDROST.POWER 50CC SIP	[2]
1	33022033	1	GASKET STEERING UNIT KIT	[3]
2	33018808	1	CYLINDER POWER STEERING KIT	[4]
3	33010199	1	Hydraulikölfilter SR 1800	
4	33011530	1	Deckel	
6	33018809	1	TANK OIL KIT	[5]
7	33018810	1	FILTER PRESSURE KIT	[6]
8	33019737	1	Fahrmotor	[7]
9	33018802	1	Zylinder Kit	[8]
10	33018811	1	Hydraulik Zylinder	[9]
10	33021068	1	ADAPTER F CYLINDER W/JOINT KIT	[10]
11	33022413	1	Kühler	
12	33023380	1	MOTOR HYDRAULIC F MAIN BROOM KIT	[11]
13	33018807	1	Seitenbesenmotor	[12]
14	33018812	1	Verteiler 3 Elemente Kpl.	[13]
15	33018815	1	Verteiler 1 Element Kpl.	[14]
16	33023362	1	PUMP HYDRAULIC TWIN KIT	[15]
17	33023338	1	PUMP PISTON 19CC KIT	[16]
17	33023341	1	PUMP AND SUPPORT MOTOR KIT	[17]
17	33022094	1	GASKET FOR HYDRAULIC PUMP KIT P01	[18]
17	33023034	1	PINION F PUMP TRACTION P01 SIP	[18]
18	33020222	1	FAN AXIAL 48V	
19	33018817	1	Kontrolle Ventil Doppel	[19]
20	33018840	2	Kontrolle Ventil	[20]
21	33020853	1	PIN HYDRAULIC CYLINDER PHOS.	
22	33011529	1	Ölstandsanzeige	
23	33020265	1	CONVEYOR FOR AIR COOLER	
24	33021767	1	SIDE BROOM RIGHT CYLINDER KIT	[21]
25	33021765	1	MAIN BROOM CYLINDER KIT	[22]
26	33020339	1	HARDWARE HYDRAULIC KIT	[23]
27	33015542	1	Mantel D60 x 500	[23]
28	33015544	1	SHEATH 90 D56 BLACK L.700MM	[23]

Part Notes:

[1] - FOR MODEL NO. 13300103
[2] - FOR MODEL NO. 13300149
[3] - FOR PART NO. 33022292 - 33022286
[4] - POS. 23-2 - See Hydraulic plant assy 3
[5] - POS. 22-17-20-21-19-18 - See Hydraulic plant assy 2
[6] - POS. 10-11 - See Hydraulic plant assy 2
[7] - POS. 21-22 - See Hydraulic plant assy 3
[8] - POS. 13-14-15-16 - See Hydraulic plant assy 2
[9] - POS. 1-2-3-4-27 - See Hydraulic plant assy 3
[10] - FOR PART NO. 33018811 - STARTING FROM S/N 103206080
[11] - POS. 8-1 See Hydraulic plant assy 2
SEE INST. INSTR. 33023397
[12] - POS. 23-24 - See Hydraulic plant assy 2
[13] - POS. 2-3-4-5-6-7 - See Hydraulic plant assy 2
[14] - POS. 1-7-9 - See Hydraulic plant assy 2
[15] - POS. 17-18-19-20-25 - See Hydraulic plant assy 3
[16] - POS. 22-24-26 - See Hydraulic plant assy 3
[17] - FOR MACHINE UNTIL S/N 3810114600047 - SEE INST. INTR. 33023030 - SEE TSB-FC 2014-004
[18] - FOR PART NO. 33022111
[19] - POS. 6-12-13-14-15-16 - Hydraulic plant assy 3
[20] - POS. 10-2 - Hydraulic plant assy 3
[21] - POS. 13-14-15-25-26-27 - Hydraulic plant assy 2
[22] - POS. 5-6-7-8-9 - Hydraulic plant assy 3
[23] - NOT SHOWN

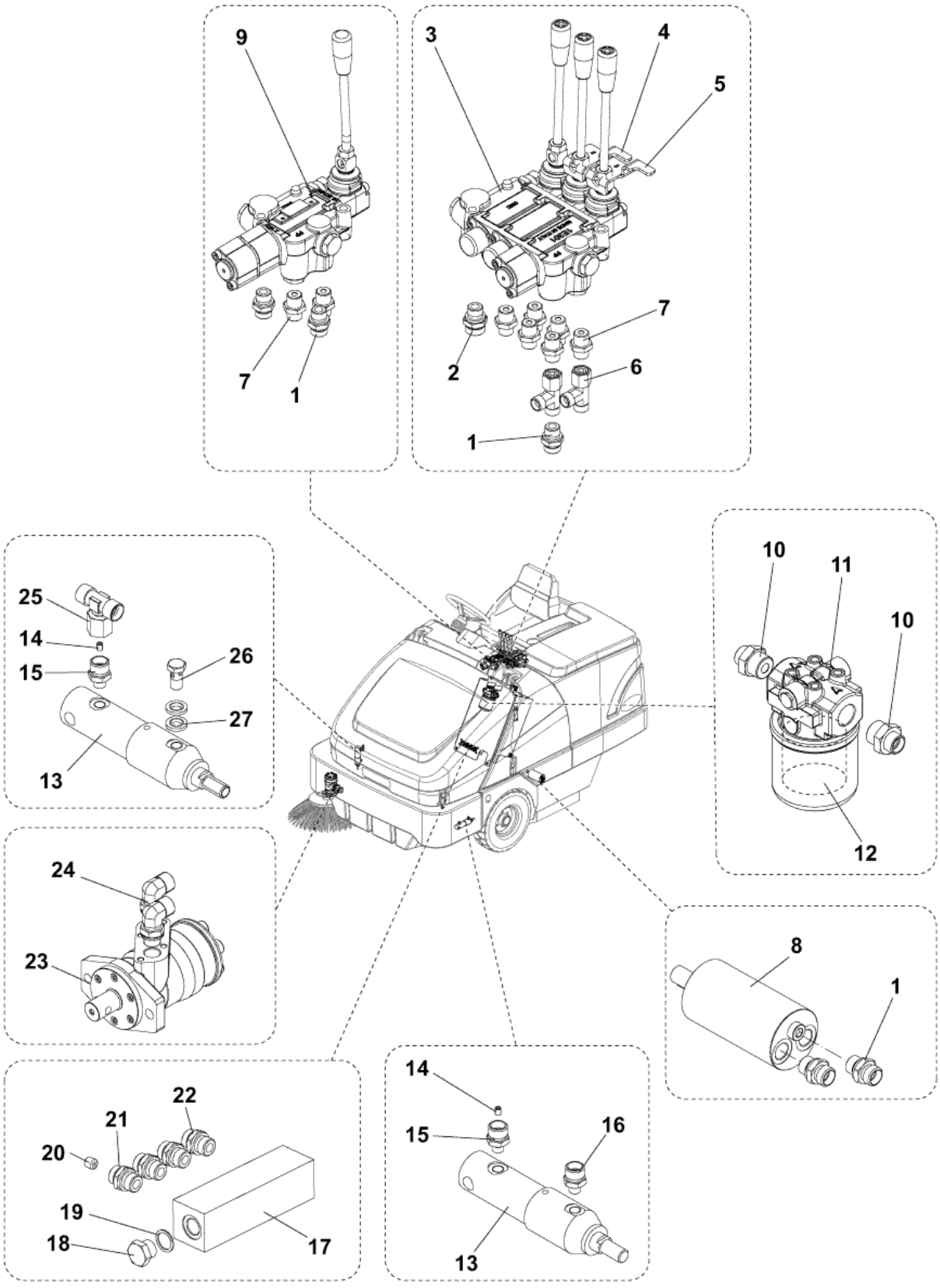
9
7
1
3
4
5
7
2
6
1
25
14
15
26
27
13
10
11
10
12
24
23
8
1
14
15
16
13
22
21
20
19
18
17

Pos.	Artikel-Nr.	Menge	Variante	Notes
1	33015917	5	FITTING MALE 3/8 BSP - M12L	
2	33016018	1	FITTING MALE 3/8 BSP - M15L	
3	33017052	1	VERTEILER	
4	33017752	1	BRACKET SECOND LEVER MANIFOLD	
5	33017753	1	BRACKET THIRD LEVER MANIFOLD	
6	145 5163 000	2	FITTING L STANDPIPE -10L-10L DIN2353	
7	146 0505 000	8	PIPE FITTING 3/8 D.10	
8	33023380	1	MOTOR HYDRAULIC F MAIN BROOM KIT	[1]
8	33020765	1	GASKET HYDRAULIC PUMP KIT	[2]
8	33023043	1	GASKET HYDRAULIC PUMP KIT	[3]
9	33017676	1	DISTRIBUTOR	
10	33023712	2	FITTING M/M 3/4-M22X1.5 SIP	
11	33017431	1	FILTER OIL CPL	
12	33017595	1	Oil Filter	
13	33021255	2	Zylinder	
13	33022009	1	GASKET MICRO CYLINDER 16/25/50 KIT	[4]
14	33018215	2	Stift M5x6 Diam. 0.5	
15	33018222	2	Anschluss 1/8	
16	33018375	1	Anschluss 1/8	
17	33017432	1	BLOCK HYD. HOSES	
18	33011456	1	PLUG 1/2	
19	33023904	1	SEAL BONDED 1/2 SIP	
20	33018675	1	DOWEL M12 DIAM 4	
21	33018676	1	FITTING M/M 1/2-M22X1.5	
22	33015757	3	FITTING MALE 1/2 - M15L	
23	33017003	1	MOTOR SIDE BROOM	
23	33020754	1	GASKETS HYDRAULIC MOT.KIT	[5]
24	33015874	2	ELBOW 90 M1/2	
25	146 0507 000	1	FITTING TEE DIN2353 10L-STANDPIPE-10L	
26	1467015000	1	BANJO BOLT 1/8 L.22 SPEC. 2 PCS SET	
27	1467004000	1	SEAL BONDED 1/8 10 PCS SET	

Part Notes:

[1] - STARTING FROM S.N. 103206080
SEE INST. INSTR. 33023397

[2] - For Item 33023380 - STARTING FROM S.N. 103206080
SEE INST. INSTR. 33023397

[3] - For Item 33023044 (WHITE) - STARTING FROM S.N. 091508810

[4] - For Item 33021255

[5] - For Item 33017003

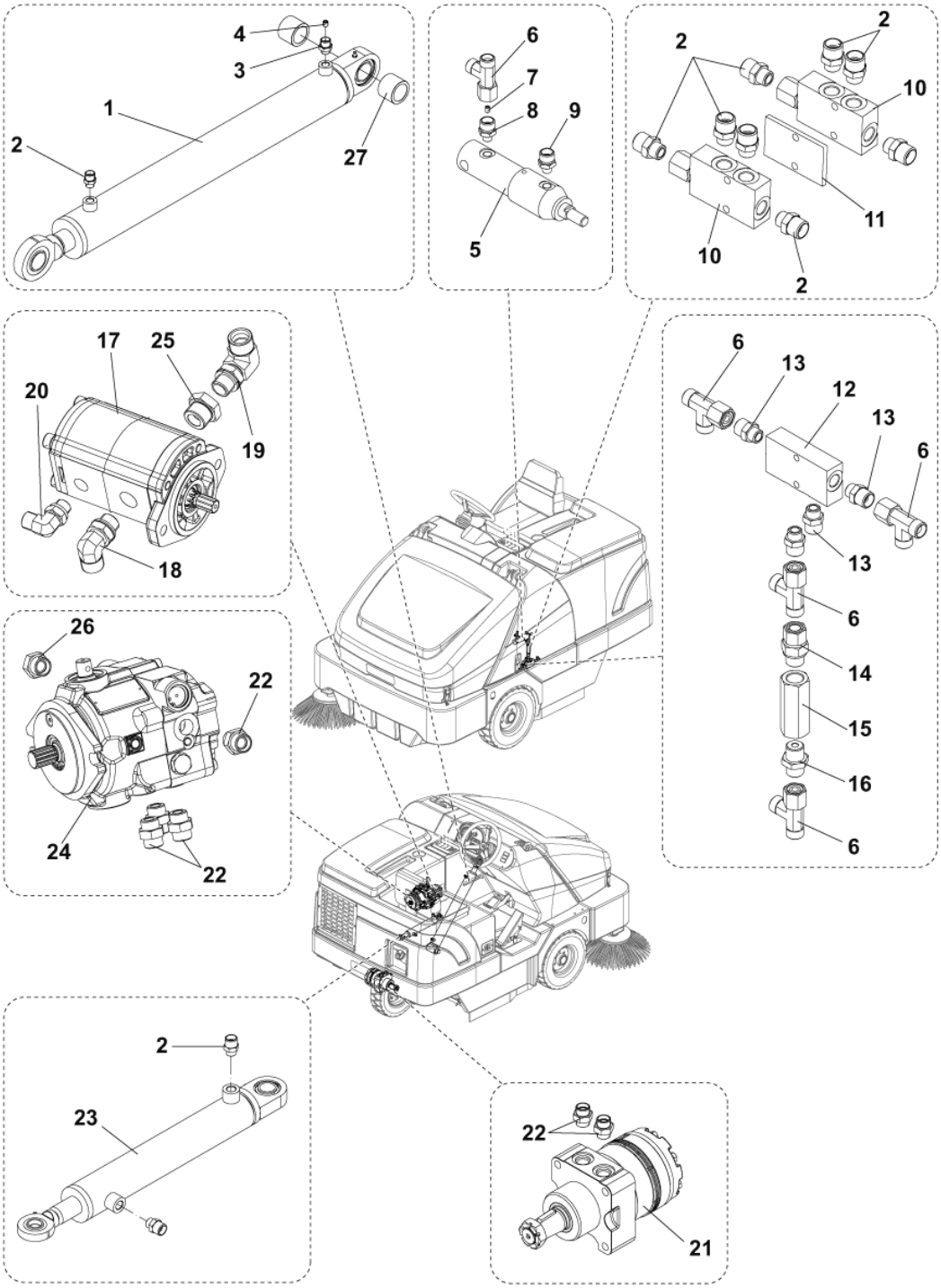
4
3
1
2
27
6
7
8
9
5
2
2
10
11
10
2
17
25
20
19
18
6
13
12
13
6
13
6
14
15
16
6
26
22
24
22
2
23
22
21

Pos.	Artikel-Nr.	Menge	Variante	Notes
1	33021257	1	CYLINDER HOPPER LIFT	
1	33011777	1	GASKET KIT	[1]
2	33023175	11	PIPE FITTING 1/4 D.10 SIP	
3	33023872	1	FITTING MALE STUD OR M1/4 KIT	
4	33019272	1	DOWEL CALIBRATED M8X8 D.1	
5	33022009	1	GASKET MICRO CYLINDER 16/25/50 KIT	
5	33021255	1	Zylinder	
6	145 5163 000	5	FITTING L STANDPIPE -10L-10L DIN2353	
7	33018215	1	Stift M5x6 Diam. 0.5	
8	33018222	1	Anschluss 1/8	
9	33018375	1	Anschluss 1/8	
10	33023300	2	CHECK VALVE 1/4 SINGLE PILOT OPERAT. SIP	
11	33019712	1	PLATE VALVES GALV.	
12	33010486	1	CHECK VALVE 1/4 DUAL PILOT OPERATED	
13	33023175	4	PIPE FITTING 1/4 D.10 SIP	
14	33018220	1	FITTING STUD BSP3/8 STNDPIPE 10L DIN2353	
15	33010481	1	Rückschlagventil 3/8	
16	146 0505 000	1	PIPE FITTING 3/8 D.10	
17	33023362	1	PUMP HYDRAULIC TWIN KIT	
17	33020755	1	GASKETS HYDRAULIC MOT.KIT	[2]
18	33015874	1	ELBOW 90 M1/2	
19	33016362	1	ELBOW	[3]
19	33022395	1	FITTING 90 M3/4-M3/4 BSP ADJ.	[4]
20	33017808	1	ELBOW	
21	33023896	1	GASKETS HYD. MOT. OLEOTECNO.KIT	
21	33017436	1	MOTOR DRIVE BATTERY MACHINE	
21	33023897	4	GASKETS HYD. MOT. OLEOTECNO.KIT	
21	33020753	1	GASKETS HYDRAULIC MOT.KIT	[5]
22	33015757	5	FITTING MALE 1/2 - M15L	
23	33021256	1	CYLINDER 40/25 205	
23	33011774	1	Dichtungs-Kit	[6]
24	33010508	1	FITTING QUICK 1/4	
25	145 8867 000	1	CAP 3/4 -1/2 MF	[7]
25	33022396	1	FITTING 90 M3/4-F3/4 BSP ADJ.	[4]
26	33022090	1	WRENCH 14	
27	33020812	2	SPACER D.30X40 H.30.5 PLAST.	

Part Notes:

[1] - For Item 33021257

[2] - For Item 33020224

[3] - NO LONGER AVAILABLE
FOR MACHINE NO. 13300149 - UNTIL S/N 3010123600008

[4] - FOR MACHINE NO. 13300149 - STARTING FROM S/N 3010123600009

[5] - For Item 33017436

[6] - For Item 33015757

[7] - STOCK COVERS GUARANTEE
FOR MACHINE NO. 13300149 - UNTIL S/N 3010123600008

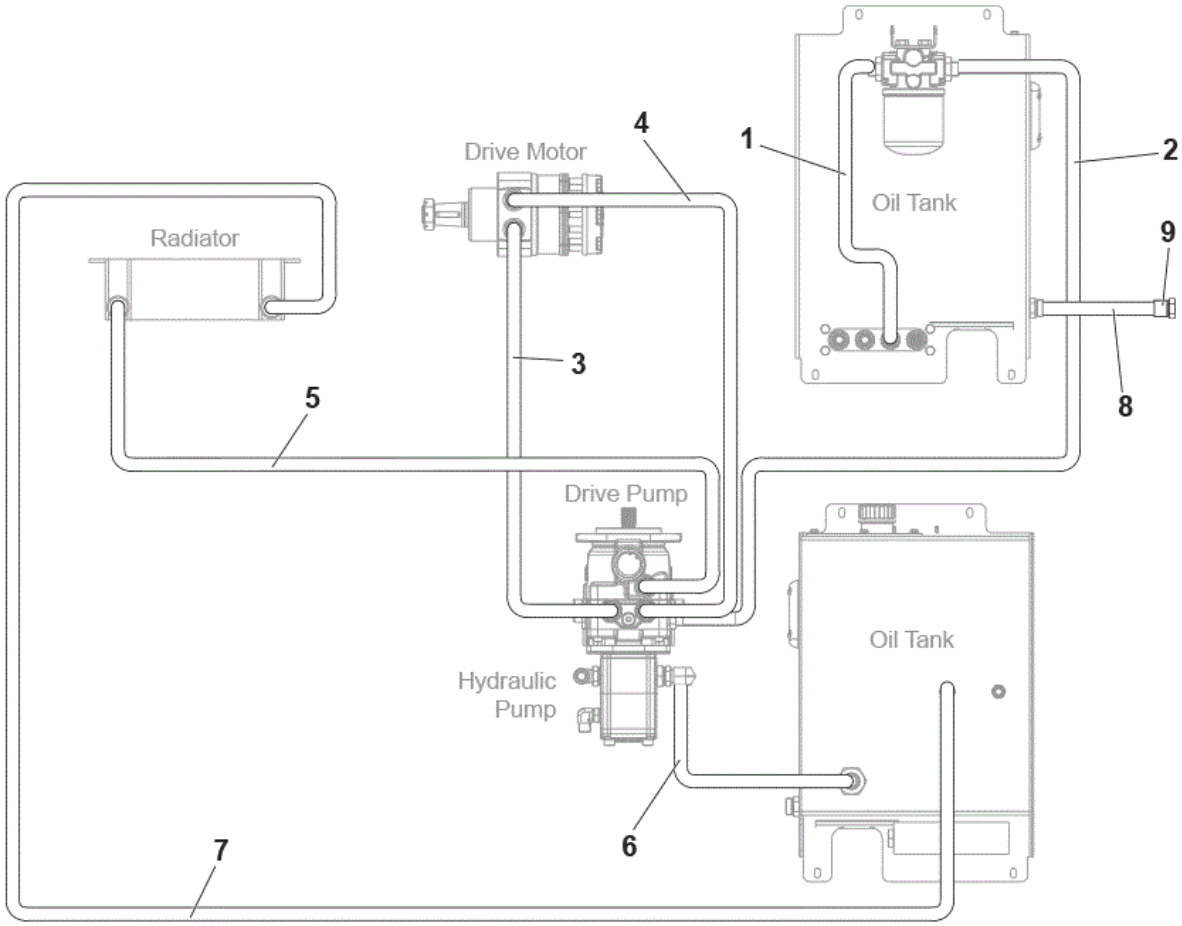
Drive Motor
Radiator
Oil Tank
Drive Pump
Hydraulic Pump
Oil Tank
1
2
3
4
5
6
7
8
9

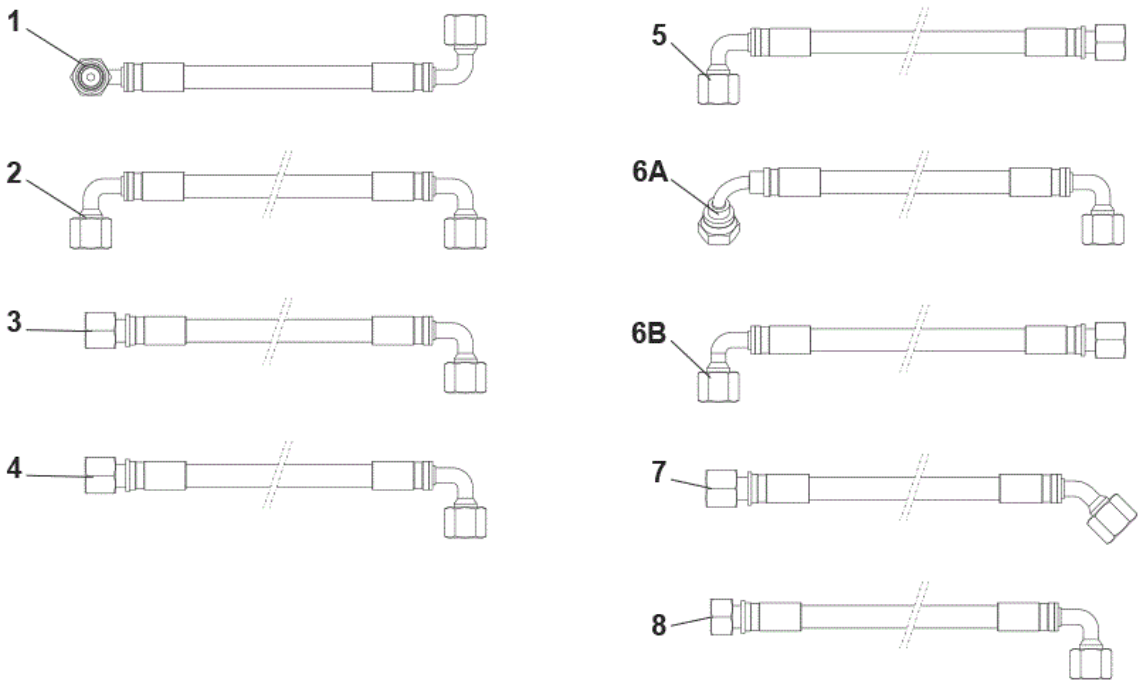
1
2
3
4
5
6A
6B
7
8

Pos.	Artikel-Nr.	Menge	Variante	Notes
1	33017649	1	HOSE HYDRAULIC 1/2 L 450	
2	33018632	1	HOSE HYDRAULIC 1/2 L 1500	
3	33023254	1	HOSE HYDR. 1/2 R16 L.1430 W/SHEATH PKD	[1]
4	33023253	1	HOSE HYDR. 1/2 R16 L.1470 W/SHEATH PKD	[1]
5	33019639	1	Hydraulikschlauch	
6A	33017651	1	HOSE HYDRAULIC 3/4 L 900	[2]
6B	33022399	1	HOSE HYDRAULIC R1AT 3/4 L 840	[3]
7	33019640	1	Hydraulikschlauch	
8	33017620	1	HOSE HYDRAULIC 1/2 L. 660	
9	33011456	1	PLUG 1/2	

Part Notes:

[1] - FOR MODEL NO. 13300149 - UNTIL S/N 3810123600008

[2] - GUARANTEE DATE EXPIRED

FOR MODEL NO. 13300149 - UNTIL S/N 3810123600008

[3] - FOR MODEL NO. 13300149 - STARTING FROM S/N 3810123600009

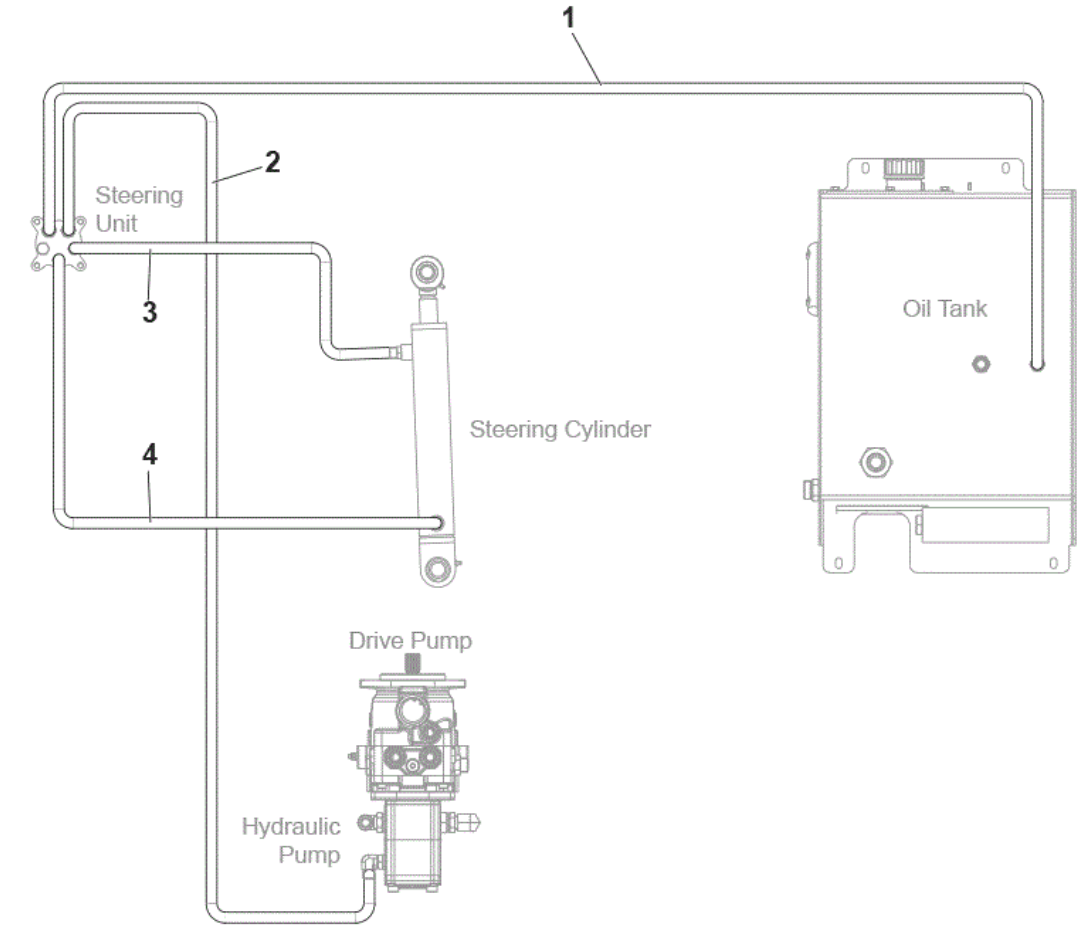
1
2
Steering
Unit
3
4
Steering Cylinder
Oil Tank
Drive Pump
Hydraulic
Pump

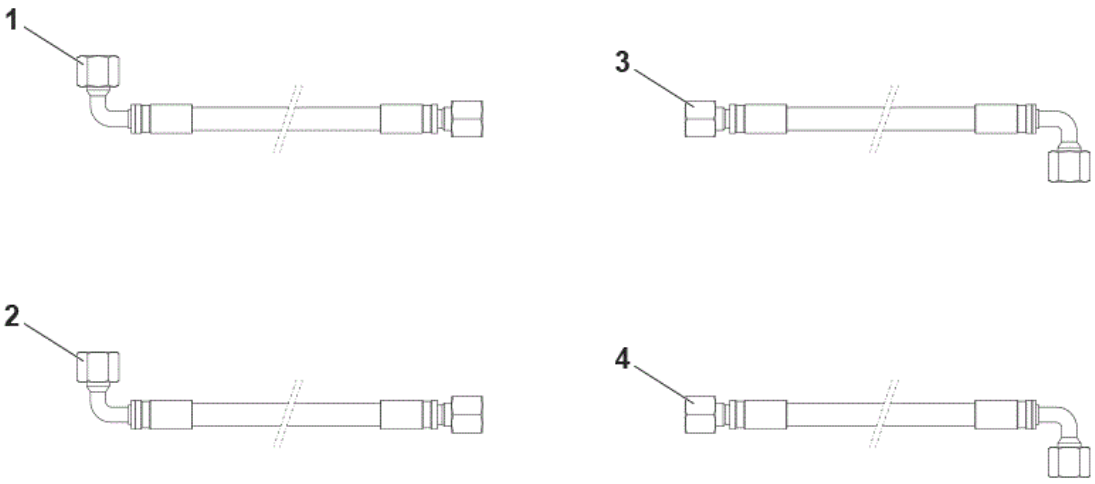
1
3
2
4

Pos.	Artikel-Nr.	Menge	Variante	Notes
1	33020136	1	HOSE HYDRAULIC 3/8 L 1200	
2	33020137	1	HOSE HYDRAULIC 3/8 L 1380	
3	33017622	1	HOSE HYDRAULIC 1/4 L 1320	
4	33017625	1	HOSE HYDRAULIC 1/4 L 1150	

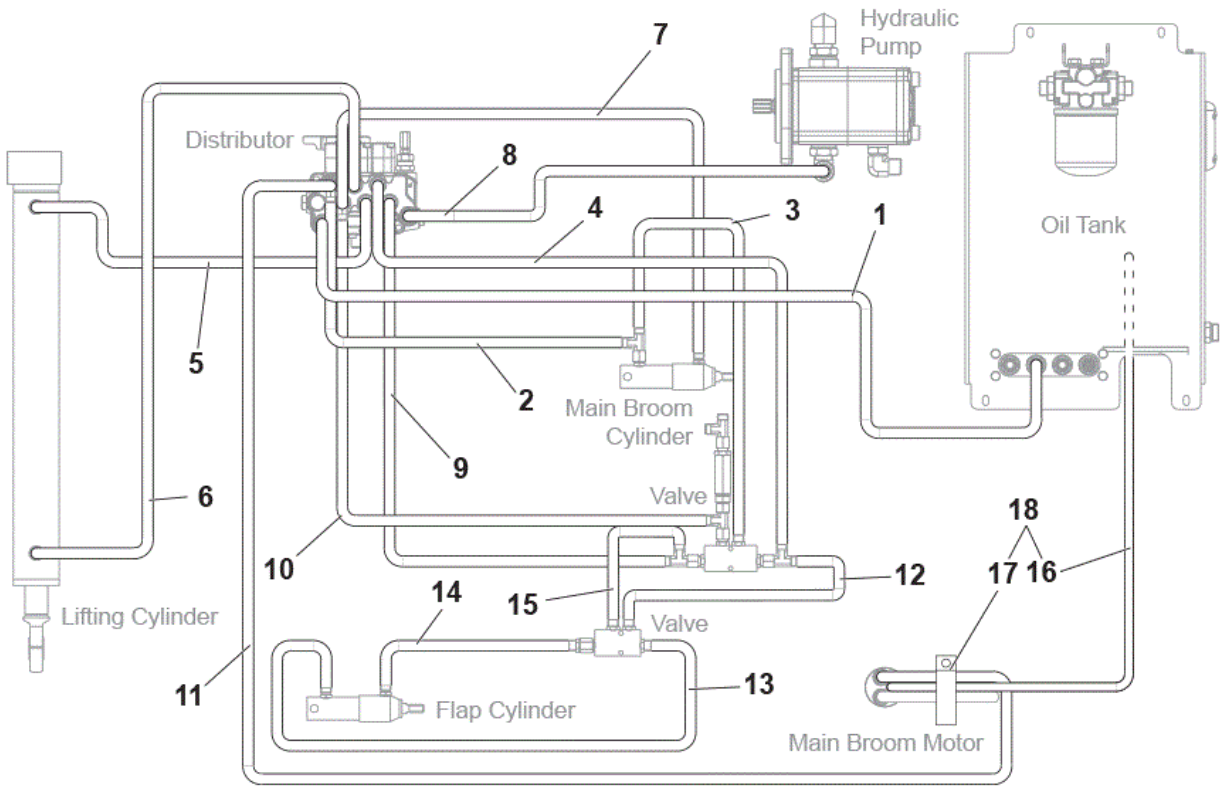
Hydraulic Pump
7
Distributor
8
4
3
1
Oil Tank
5
2
Main Broom Cylinder
9
6
Valve
18
10
12
17 16
14
15
Valve
Lifting Cylinder
11
13
Flap Cylinder
Main Broom Motor

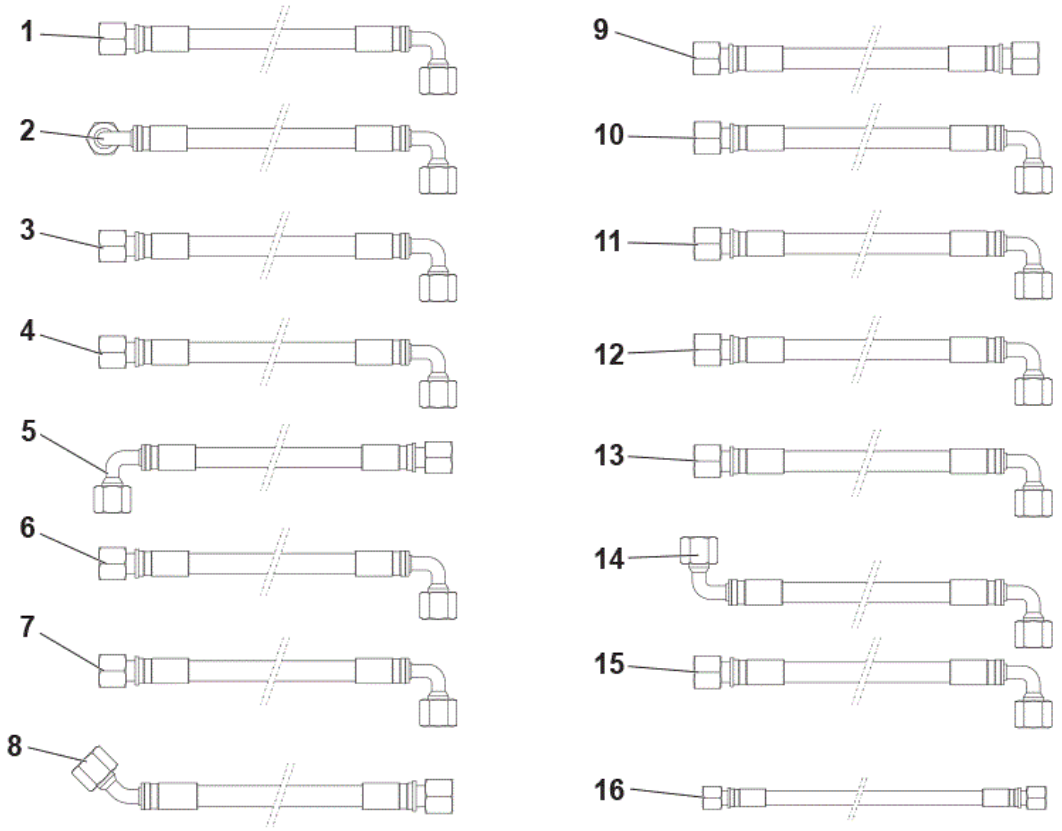
1
2
3
4
5
6
7
8
9
10
11
12
13
14
15
16

Pos.	Artikel-Nr.	Menge	Variante	Notes
1	33017650	1	HOSE HYDRAULIC 1/2 L 1050	
2	33017635	1	HOSE HYDRAULIC 1/4 L 1580	
3	33017634	1	HOSE HYDRAULIC 1/4 L 500	
4	33017628	1	HOSE HYDRAULIC 1/4 L 1100	
5	33017652	1	HOSE HYDRAULIC 1/4 L 650	
6	33017627	1	Hydraulikschlauch	
7	33017632	1	HOSE HYDRAULIC 1/4 L 1650	
8	33020284	1	HOSE HYDRAULIC 1/2 L 340	
9	33017653	1	HOSE HYDRAULIC 1/4 L 1500	
10	33017633	1	HOSE HYDRAULIC 1/4 L 1390	
11	33017655	1	HOSE HYDRAULIC 3/8 L.1400	
12	33019714	1	HOSE HYDRAULIC 1/4 L 450	
13	33017638	1	HOSE HYDRAULIC 1/4 L 2790	
14	33017647	1	HOSE HYDRAULIC 1/4 L 2320	
15	33019713	1	HOSE HYDRAULIC 1/4 L 450	
16	33023475	1	DRAIN HOSE KIT	
17	33023476	1	PLATE F HOSES KIT	
18	33023474	1	DRAIN HOSE 1/4 F MAIN BROOM CPL KIT	[1]

Part Notes:

[1] - SEE INST. INSTR. 33023478

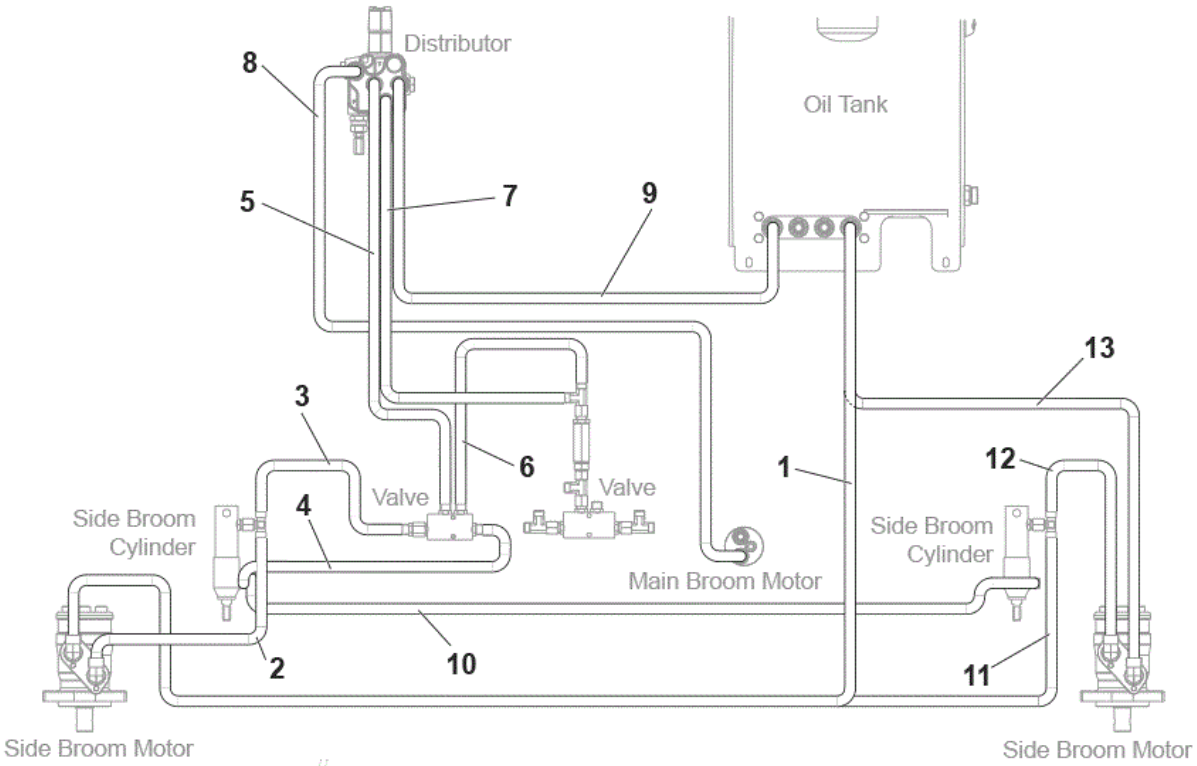
Distributor
Oil Tank
8
5
7
9
13
3
6
1
12
Valve
Valve
Side Broom
Cylinder
4
Main Broom Motor
Side Broom
Cylinder
2
10
11
Side Broom Motor
Side Broom Motor

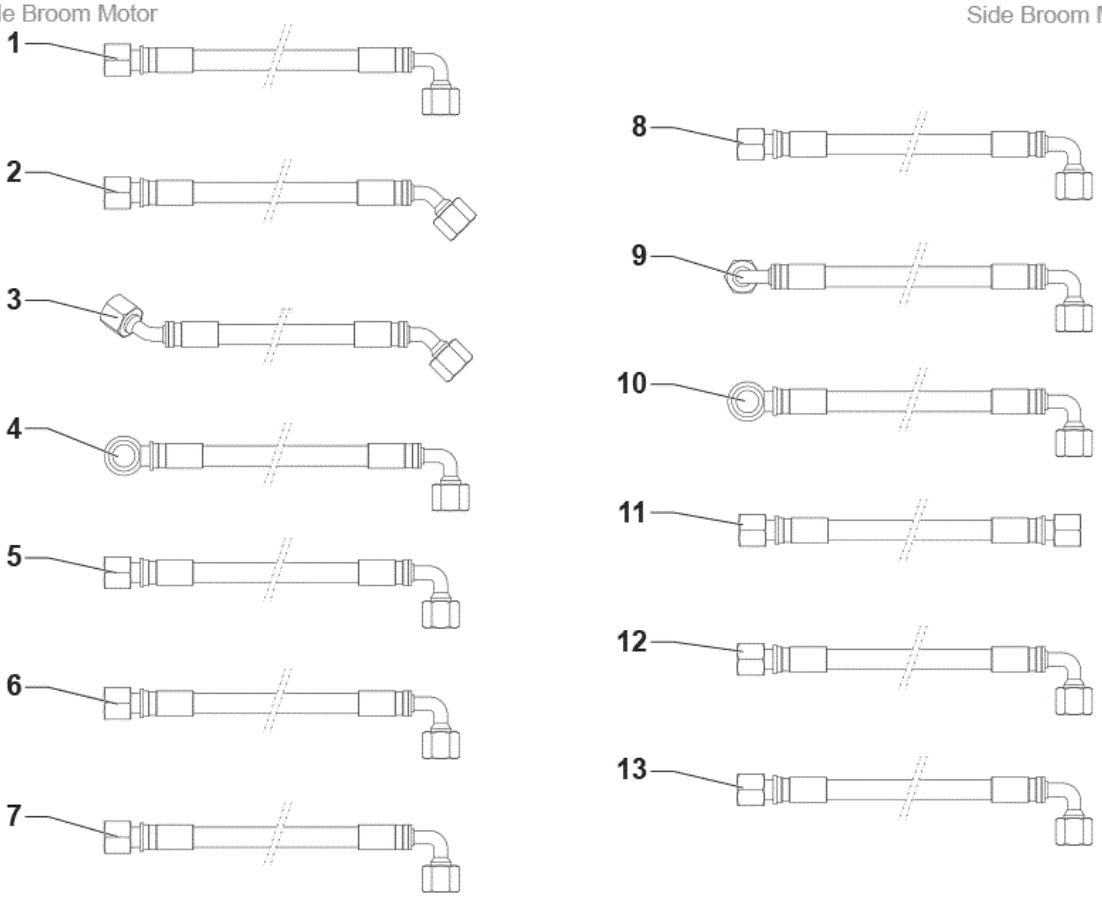
1
2
3
4
5
6
7
8
9
10
11
12
13

Pos.	Artikel-Nr.	Menge	Variante	Notes
1	33018689	1	HOSE HYDRAULIC 1/2 L 2900	[1]
2	33017640	1	HOSE HYDRAULIC 3/8 L 625	
3	33017654	1	HOSE HYDRAULIC 1/4 L 2800	
4	33017643	1	HOSE HYDRAULIC 1/4 L 3400	
5	33017646	1	HOSE HYDRAULIC 1/4 L 1460	
6	33017637	1	HOSE HYDRAULIC 1/4 L 360	
7	33017639	1	HOSE HYDRAULIC 1/4 L 1620	
8	33017631	1	HOSE HYDRAULIC 3/8 L 1520	
9	33017648	1	HOSE HYDRAULIC 1/2 L 740	
10	33017644	1	HOSE HYDRAULIC 1/4 L 2500	[2]
11	33017629	1	HOSE HYDRAULIC 3/8 L 2900	[2]
12	33017642	1	HOSE HYDRAULIC 3/8 L 626	[2]
13	33017645	1	HOSE HYDRAULIC 1/2 L 2170	[2]

Part Notes:

[1] - ONLY FOR MACHINE WITH ONE SIDE BROOM
[2] - ONLY FOR MACHINE WITH TWO SIDE BROOM

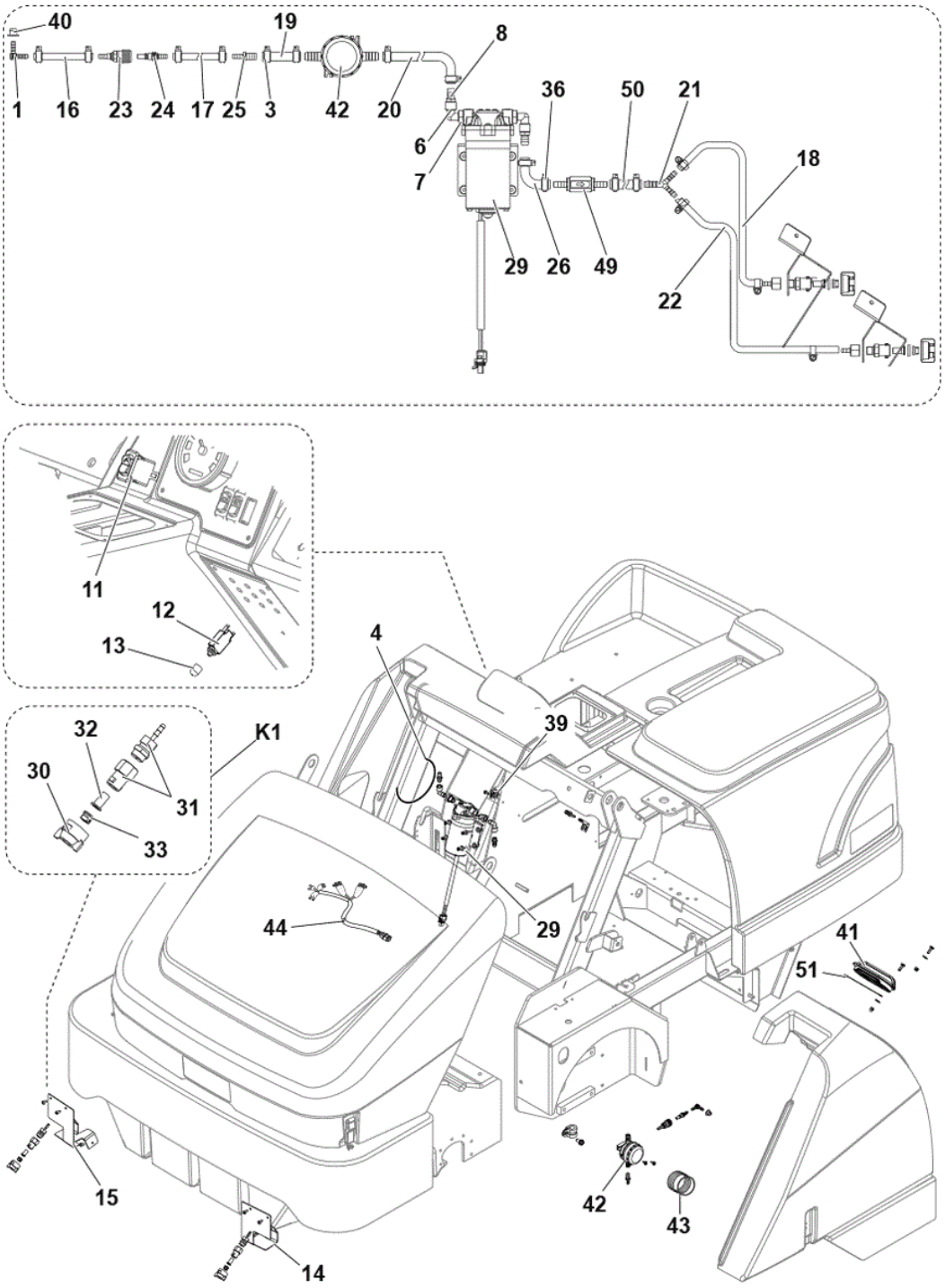
40
19
8
1
16
23
24
17
25
3
42
20
6
7
36
50
21
18
29
26
49
22
11
12
13
4
39
K1
32
30
31
33
44
29
41
51
15
14
42
43

Pos.	Artikel-Nr.	Menge	Variante	Notes
1	33020824	1	BARB HOSE 90 D.8 PLAST.	
6	33011224	2	Anschlusswinkel 90 ºSR 1450	
7	33011494	2	Reduzierung 3/8 1	
8	33011522	2	BARB HOSE STRAIGHT 1/4 D.10.5 MET.	
11	33019325	1	Schalter / Wasser	
12	33019709	1	Sicherungsautomat 2A	
13	33017386	1	BOOT CIRCUIT BREAKER	
14	33017927	1	Klammer li	
15	33017928	1	Klammer re	
21	1467179000	1	ELBOW Y D.6-8-6 2 PCS SET	
23	1465915000	1	CONNECTOR FEMALE	
24	1465916000	1	CONNECTOR MALE	
25	1467180000	2	FITTING STRAIGHT REDUCER 4 PCS SET	
29	33019726	1	PUMP WATER 24V KIT	
30	1467248000	2	RING NUT QUICK COUPLING PKD	
31	33020865	2	ADAPTER SPRAY KIT	
32	1467245000	1	Rueckschlagventil Filter	
33	1467246000	2	NOZZLE SPRAY D. 0.33 S.S. PKD	
33	1467247000	1	NOZZLE SPRAY D. 0.53 BRASS PKD	
36	33023593	4	Schlauchbriede 8-16/9 DIN3017, 2 St.	
40	909 6089 000	1	Dichtstopfen SR 1450	
41	9097385000	1	Kappe Frischwassertank	
42	9100000860	1	Wasserfilter	
43	9100000861	1	NET WATER FILTER REINFORCED PKD	
44	33019249	1	Kabelsystem	
49	33021303	1	VALVE CHECK D.10 KIT	[1]
50	33022092	1	HOSE POLYESTER REINF. D.10 L.900MM SIP	
51	9097485000	1	CABLE OPENING CAP	
K1	33019324	2	Düsen Spray Kit	[2]
K2	33019326	1	Verschraubungskit	[3]
K3	33019377	1	Staubbindesystem 48V	[4]

Part Notes:

[1] - SEE INST.INSTR. 33021304
[2] - POS. 30-31-32-33
[3] - NOT SHOWN - POS. 1-3-4-6-7-8-16-17-18-19-20-21-22-23-24-25-26-39-40
[4] - NOT SHOWN - OPTIONAL - SEE INST.INSTR. 33019375

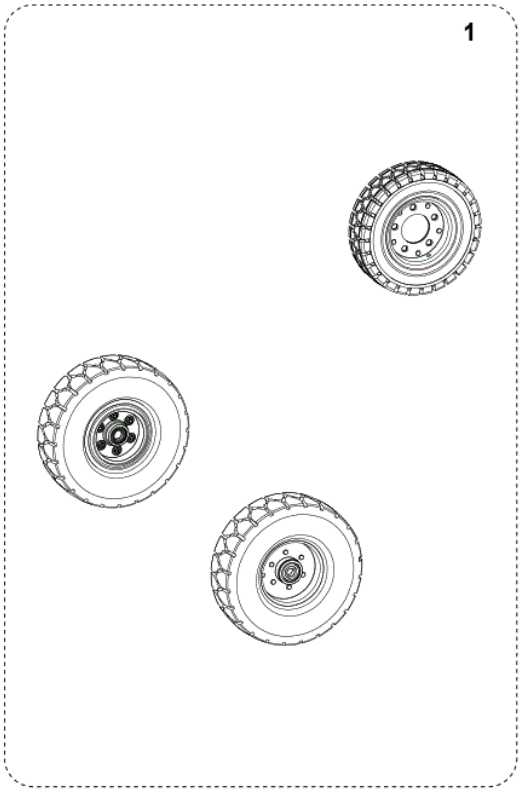
1

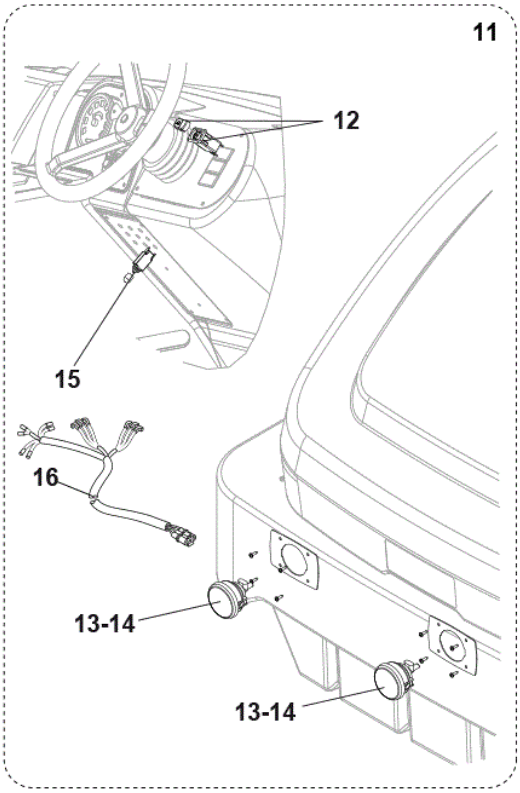
11
12
15
16
13-14
13-14

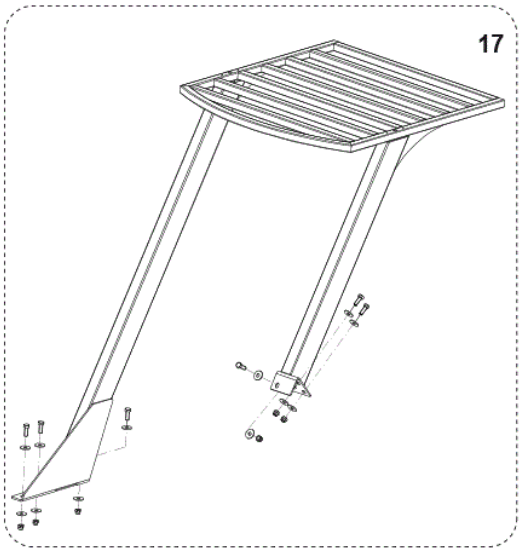
17

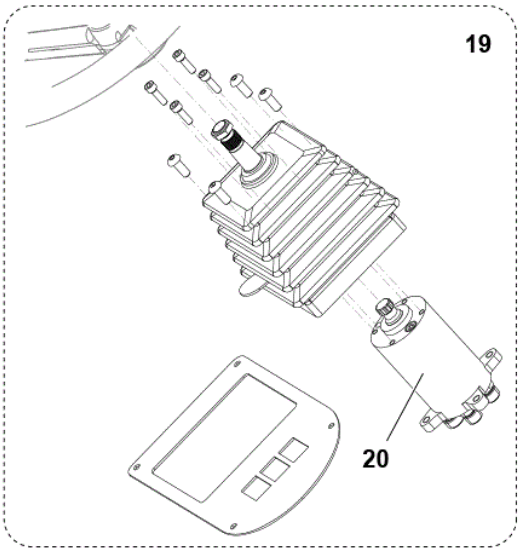
19
20

Pos.	Artikel-Nr.	Menge	Variante	Notes
1	33019172	1	Rad Voll-Gummi Set, n. mark.	[1]
11	33023231	1	Arbeitslicht 48V KIT f. Batterie Version	[2]
12	33019736	1	SWITCH FRONT LIGHT KIT	
13	1466356000	2	LIGHT WORK 24V CPL SIP	[3]
14	1466358000	2	BULB LIGHT 24V 70W H3 SIP	[3]
15	33023236	1	CIRCUIT BREAKER 10A PKD	
16	33019220	1	HARNESS FRONT HEADLIGHT 24 V	
17	33019171	1	Fahrerschutzdach-Set	[4]
19	33019174	1	Lenkrad-Set, einstellbar	[5]
20	33022286	1	STEERING UNIT HYDROST.POWER 50CC SIP	
20	33022033	1	GASKET STEERING UNIT KIT	[6]
21	56507038	1	Rundumlicht	[7]
22	33022681	1	HARDWARE BEACON KIT	[8]

Part Notes:

[1] - OPTIONAL
[2] - OPTIONAL - SEE INST. INSTR. 33023228
[3] - FOR KIT 33023231, 33023240
[4] - OPTIONAL - SEE INST.INSTR. 33020629
[5] - OPTIONAL - SEE INST.INSTR. 33019157
[6] - For Item 33022286
[7] - NOT SHOWN - OPTIONAL - INST. INSTR. 56040898
[8] - NOT SHOWN

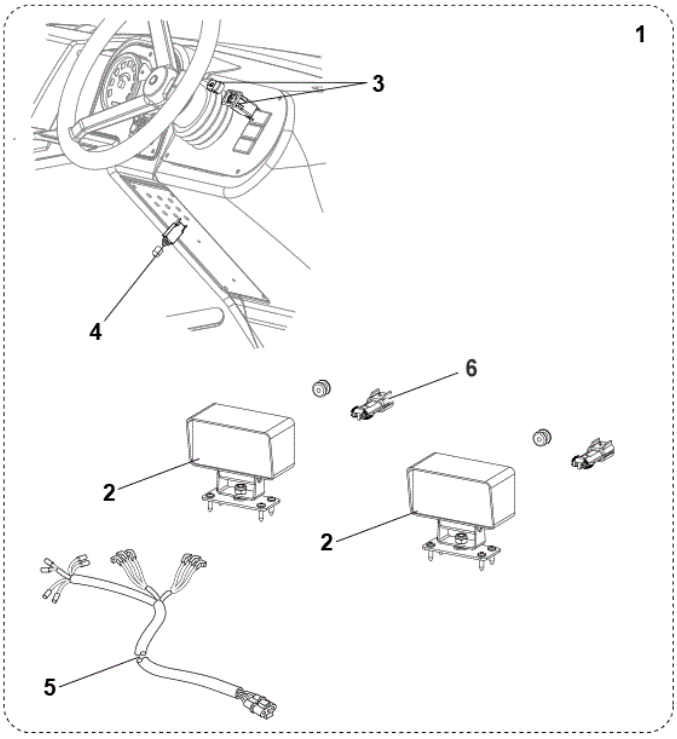
1
3
4
6
2
2
5

Pos.	Artikel-Nr.	Menge	Variante	Notes
1	33023681	1	LIGHT FRONT LED 48V KIT	[1]
2	33023717	2	LIGHT WORK LED 10-30V 18W KIT	[2]
3	33019736	1	SWITCH FRONT LIGHT KIT	
4	33023236	1	CIRCUIT BREAKER 10A PKD	
5	33019220	1	HARNESS FRONT HEADLIGHT 24 V	
6	1467754000	2	Steckverbinder 2-Wege-Kit	[3]

Part Notes:

[1] - NEVER LAUNCHED
OPTIONAL - SEE INST. INSTR. 33023683

[2] - SEE PI 2017-002

DE TSB-FC-2017-065 SR1601 Neue Scheinwerfer vorne

TSB-FC-2017-065 SR1601 new headlight

[3] - NO REPLACEMENT

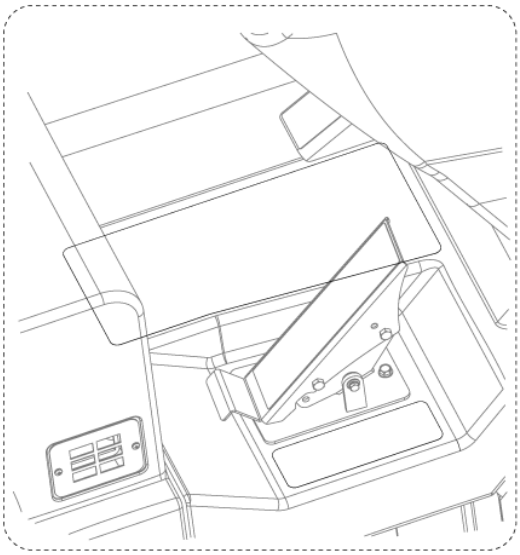

1

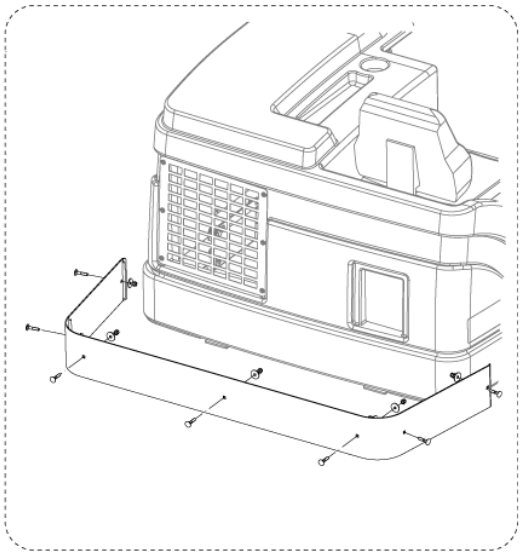

3

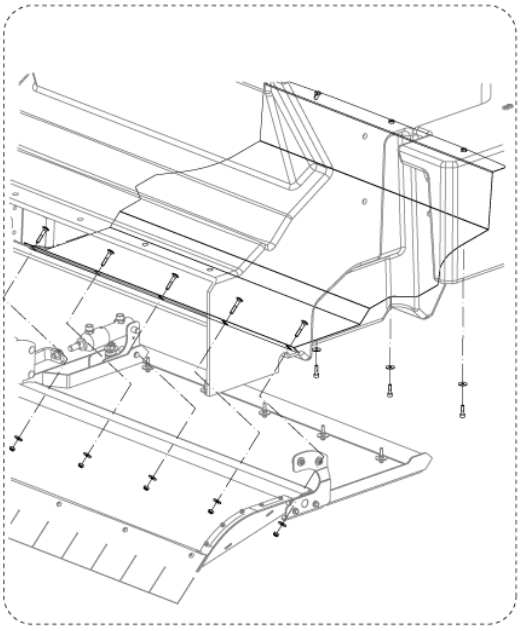

5

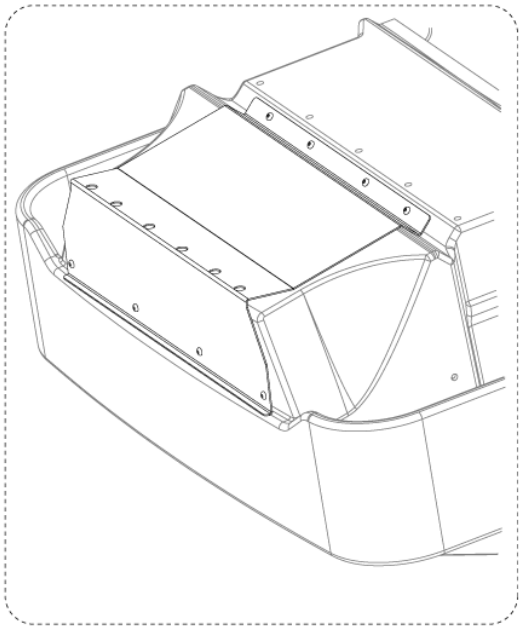

7

Pos.	Artikel-Nr.	Menge	Variante	Notes
1	33019570	1	Fußboden Matte	[1]
3	33019572	1	Stoßfängerschutz-Set	[2]
5	33019573	1	Schmutzbehälterschutz	[3]
7	33021392	1	HOPPER PROTECTION KIT	[4]

Part Notes:

[1] - OPTIONAL - SEE INST. INSTR. 33019195
[2] - OPTIONAL - SEE INST. INSTR. 33019205
[3] - OPTIONAL - SEE INST. INSTR. 33019207
[4] - OPTIONAL - SEE INST. INSTR. 33021393

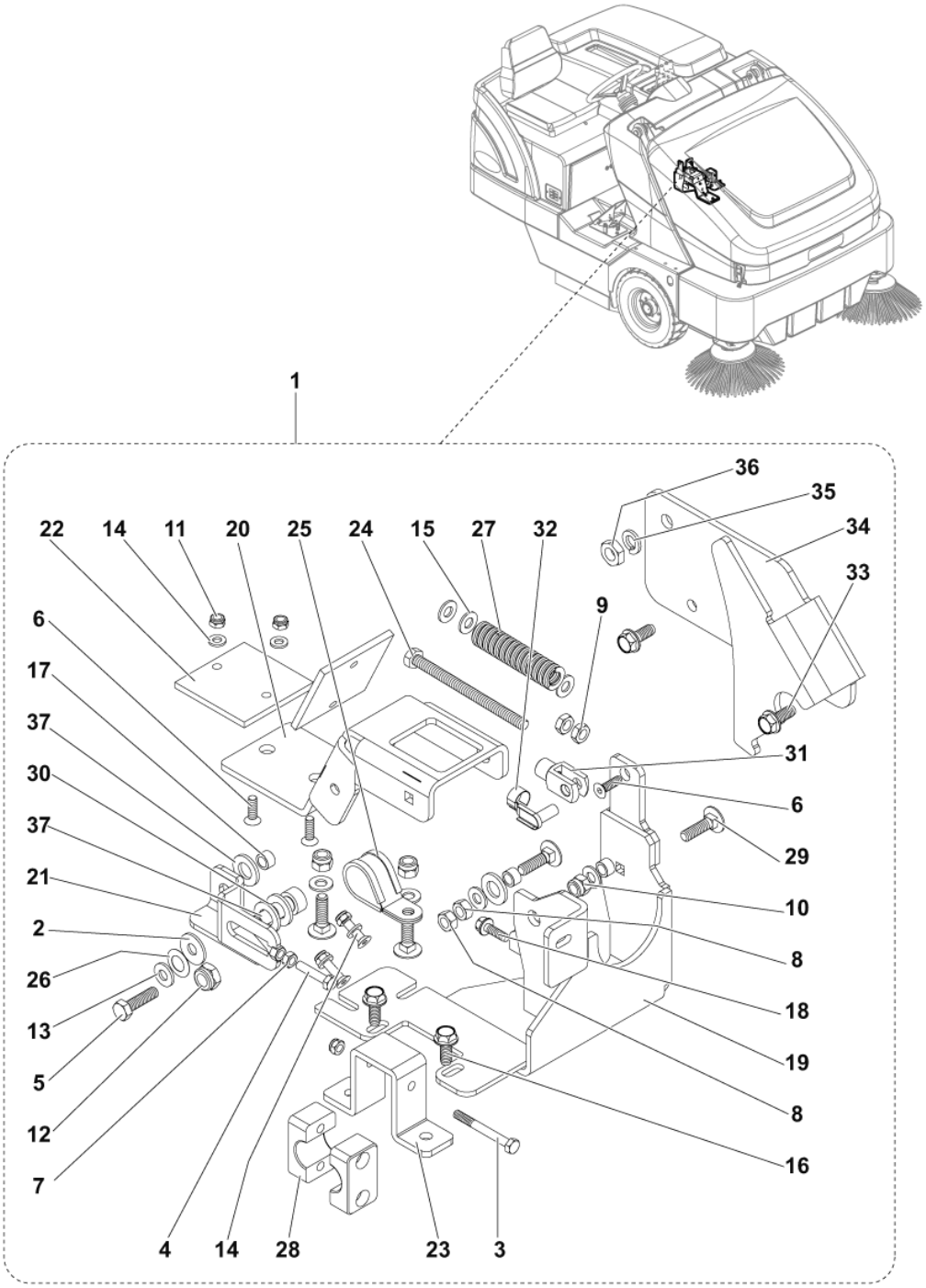
1
36
35
34
33
22
14
11
20
25
24
15
27
32
9
6
17
37
30
37
21
2
26
13
5
12
7
31
6
29
10
8
18
19
8
16
4
14
28
23
3

Pos.	Artikel-Nr.	Menge	Variante	Notes
1	33020361	1	LIMITING SPEED KIT RETROFIT	[1]
19	33019995	1	BASE SPEED LIMITING	
20	33019996	1	LEVER SPEED LIMITING	
21	33019997	1	LEVER ADJUSTER	
22	33019998	2	PLATE FOR SPEED LIMITING	
23	33020212	1	SUPPORT COLLAR	
25	33020367	1	CLAMP HOSE D.25	
26	146 0617 000	1	U-Scheibe	
34	33020565	1	BRACKET SAFETY GUIDE	
K1	33020350	1	HARDWARE SPEED LIMITING KIT	[2]

Part Notes:

[1] - OPTIONAL - SEE INST. INSTR. 33020363

[2] - NOT SHOWN - POS. 2-3-4-5-6-7-8-9-10-11-12-13-14-15-16-17-18-24-27-28-29-30-31-32-33-35-36

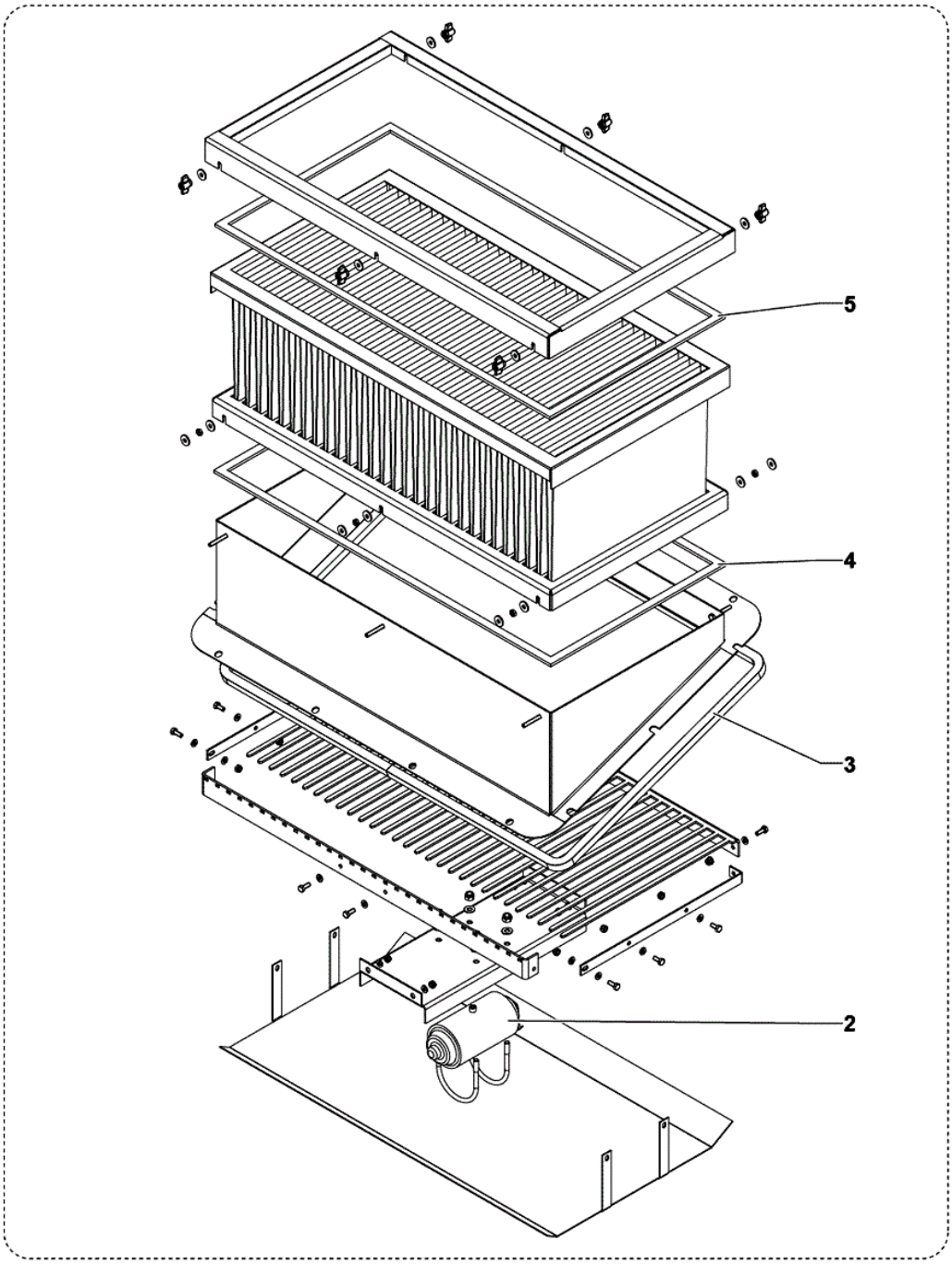

1

Pos.	Artikel-Nr.	Menge	Variante	Notes
1	33019176	1	Taschenfilter-Set 12V	[1]
2	146 1104 000	1	Filterüttler 90W 12V	
3	33018634	1	Abdichtung Filter	
4	33017421	1	GASKET ADHESIVE 15X5 L.2200MM PKD	
5	33017423	1	GASKET ADHESIVE 15X5 L.2250MM PKD	

Part Notes:

[1] - OPTIONAL - SEE INST. INSTR. 33018766

1

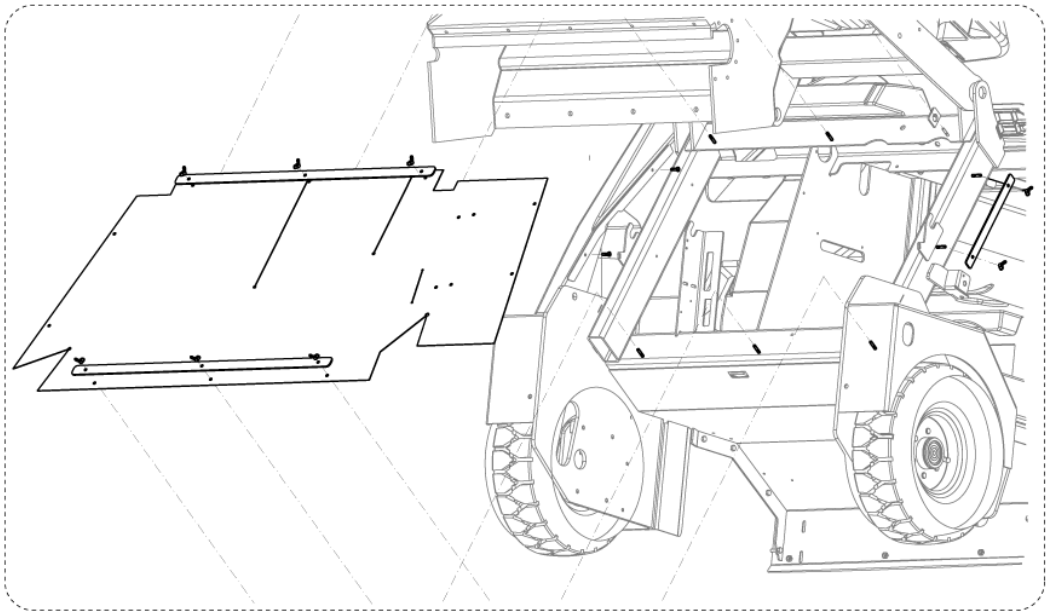

1

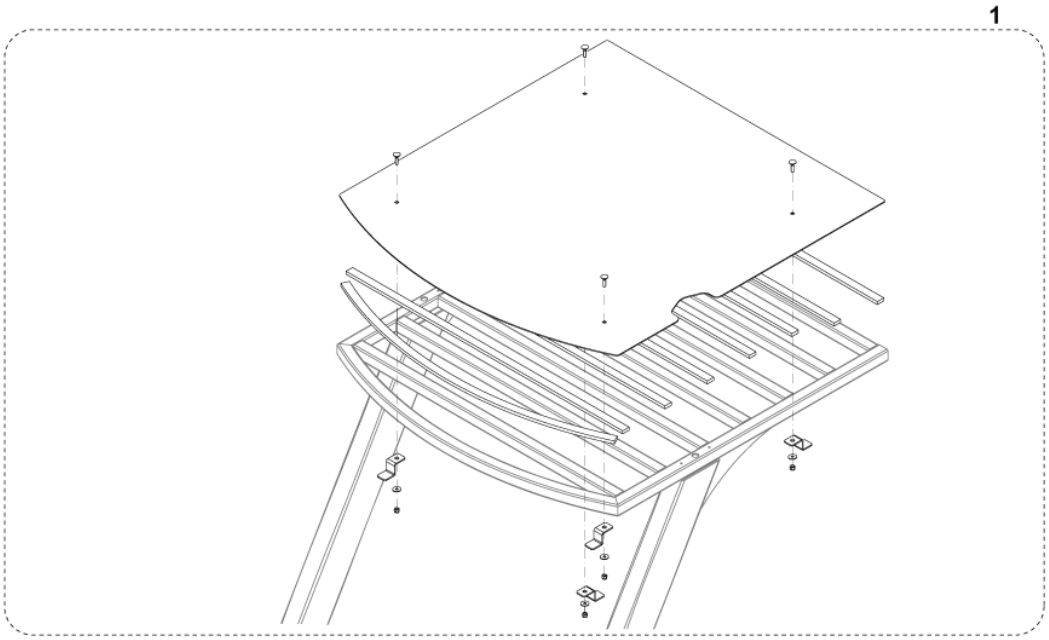

Pos.	Artikel-Nr.	Menge	Variante	Notes
1	33020372	1	HOPPER DUST FLAP KIT	[1]
2	33020052	1	Verdeck-Set	[2]
3	33021975	1	GAS SPRING KIT	[3]

Part Notes:

[1] - OPTIONAL - SEE INST.INSTR. 33020373
[2] - OPTIONAL - SEE INST.INSTR. 33020051
[3] - NOT SHOWN - OPTIONAL - SEE INST. INSTR. 33021977

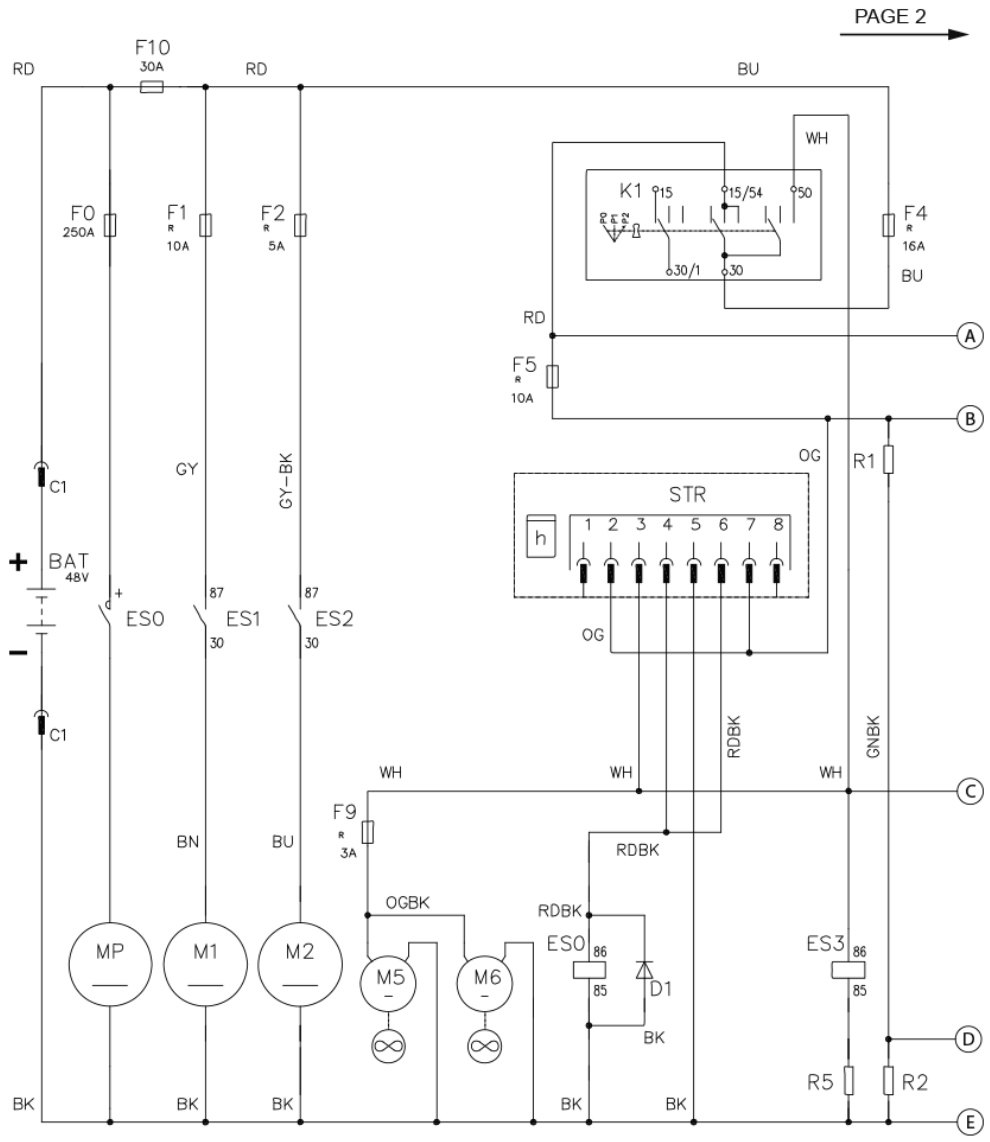
PAGE 2
F10
30A
RD
RD
BU
WH
K1
15
15/54
50
30/1
30
F0
250A
F1
10A
F2
5A
F4
16A
BU
RD
A
F5
10A
B
C1
GY
GY-BK
OG
R1
STR
h
1 2 3 4 5 6 7 8
BAT
48V
ES0
ES1
ES2
87
30
OG
C1
RDBK
GNBK
WH
WH
WH
C
F9
3A
BN
BU
RDBK
OGBK
RDBK
MP
M1
M2
M5
M6
ES0
86
85
D1
BK
ES3
86
85
D
R5
R2
BK
BK
BK
BK
BK
E

Pos.	Artikel-Nr.	Menge	Variante	Notes
BAT	80562010		Nassbatterie inkl. 2xTrog, 48V-375 Ah	
BE1	56510893		BEACON-WARNING LED	
BZ1	33022643		BUZZER REVERSE GEAR BATTERY KIT	
C1	33023729		CONNECTOR 320A BLUE SIP	
ES0	33017449		CONTACTOR UNIPOLAR 48V	
ES1	909 6622 000		Relais 24 V 40 A	
ES2	909 6622 000		Relais 24 V 40 A	
ES3	146 1646 000		RELAY 24V	
F0	33008583		POWER FUSE 250A	
F1	33023236		CIRCUIT BREAKER 10A PKD	
F2	33020282		CIRCUIT BREAKER 5A	
F3	33019709		Sicherungsautomat 2A	
F4	33017360		Sicherung 16A	
F5	33023236		CIRCUIT BREAKER 10A PKD	
F6	33023236		CIRCUIT BREAKER 10A PKD	
F8	33023236		CIRCUIT BREAKER 10A PKD	
F10	909 5101 000		FUSE 30A	
HN	33009017		Horn 48V	
K1	33020442		Schlüsselschalter	
L1/2	33019229		HEADLIGHT 24V	[1]
M1	33015700		Saugmotor 48V	
M2	33017232		Rüttelmotor 48V	
M3	33019726		PUMP WATER 24V KIT	
M5	33020222		FAN AXIAL 48V	
M6	33023036		FAN COOLING MOTOR ELECTRIC KIT	[2]
MP	33022549		MOTOR ELECTRIC AND CABLE EXTENSION KIT	
STR	33023308		GAUGE 48V KIT	
SW1	33018843		Schalterkit	
SW2	33018844		SWITCH HORN KIT	
SW4	1466507000		MICROSWITCH 10A 250V PKD	
SW6	33019325		Schalter / Wasser	
T1	1466193000		RELAY TIMER 20 SECONDS PKD	
T2	1466194000		RELAY TIMER 0.5 SEC. PKD	
T3	1466196000		RELAY TIMER 0.5 SECONDS PKD	

Part Notes:

[1] - SEE TSB-FC-2015-013
[2] - NO LONGER AVAILABLE

PAGE 1
PAGE 3

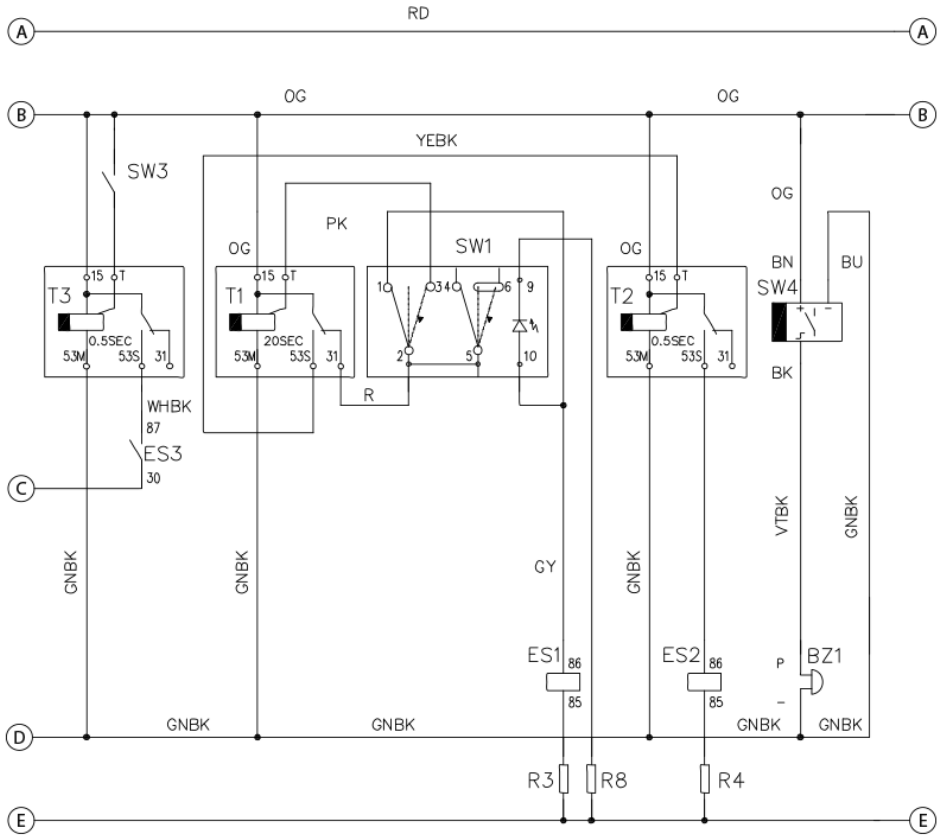
RD
OG
OG
YEBK
SW3
PK
OG
SW1
OG
OG
BN
BU
T3
T1
T2
SW4
0.5SEC
20SEC
0.5SEC
R
WHBK
87
ES3
30
BK
VTBK
GNBK
GNBK
GY
GNBK
GNBK
ES1
ES2
P
BZ1
GNBK
GNBK
GNBK
GNBK
R3
R8
R4

Pos.	Artikel-Nr.	Menge	Variante	Notes
BAT	80562010		Nassbatterie inkl. 2xTrog, 48V-375 Ah	
BE1	56510893		BEACON-WARNING LED	
BZ1	33022643		BUZZER REVERSE GEAR BATTERY KIT	
C1	33023729		CONNECTOR 320A BLUE SIP	
ES0	33017449		CONTACTOR UNIPOLAR 48V	
ES1	909 6622 000		Relais 24 V 40 A	
ES2	909 6622 000		Relais 24 V 40 A	
ES3	146 1646 000		RELAY 24V	
F0	33008583		POWER FUSE 250A	
F1	33023236		CIRCUIT BREAKER 10A PKD	
F2	33020282		CIRCUIT BREAKER 5A	
F3	33019709		Sicherungsautomat 2A	
F4	33017360		Sicherung 16A	
F5	33023236		CIRCUIT BREAKER 10A PKD	
F6	33023236		CIRCUIT BREAKER 10A PKD	
F8	33023236		CIRCUIT BREAKER 10A PKD	
F10	909 5101 000		FUSE 30A	
HN	33009017		Horn 48V	
K1	33020442		Schlüsselschalter	
L1/2	33019229		HEADLIGHT 24V	[1]
M1	33015700		Saugmotor 48V	
M2	33017232		Rüttelmotor 48V	
M3	33019726		PUMP WATER 24V KIT	
M5	33020222		FAN AXIAL 48V	
M6	33023036		FAN COOLING MOTOR ELECTRIC KIT	[2]
MP	33022549		MOTOR ELECTRIC AND CABLE EXTENSION KIT	
STR	33023308		GAUGE 48V KIT	
SW1	33018843		Schalterkit	
SW2	33018844		SWITCH HORN KIT	
SW4	1466507000		MICROSWITCH 10A 250V PKD	
SW6	33019325		Schalter / Wasser	
T1	1466193000		RELAY TIMER 20 SECONDS PKD	
T2	1466194000		RELAY TIMER 0.5 SEC. PKD	
T3	1466196000		RELAY TIMER 0.5 SECONDS PKD	

Part Notes:

[1] - SEE TSB-FC-2015-013
[2] - NO LONGER AVAILABLE

PAGE 2

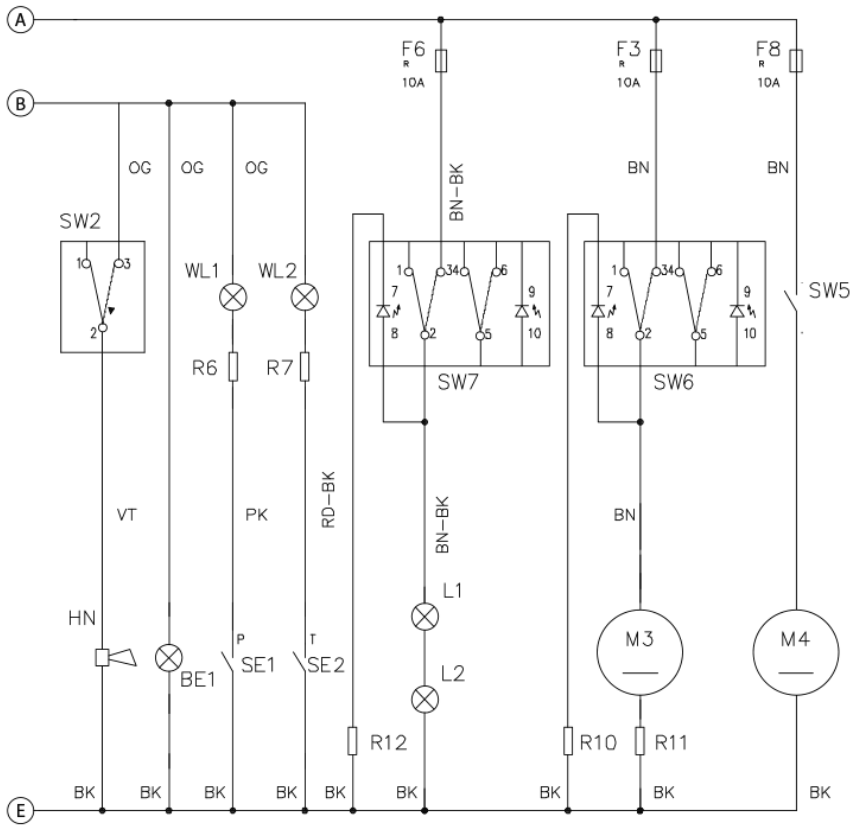
A
B
E
F6
R
10A
F3
R
10A
F8
R
10A
OG
OG
OG
BN-BK
BN
BN
SW2
WL1
WL2
SW5
R6
R7
SW7
SW6
VT
PK
RD-BK
BN-BK
BN
L1
HN
M3
M4
BE1
SE1
SE2
L2
R12
R10
R11
BK
BK
BK
BK
BK
BK
BK
BK
BK

Pos.	Artikel-Nr.	Menge	Variante	Notes
BAT	80562010		Nassbatterie inkl. 2xTrog, 48V-375 Ah	
BE1	56510893		BEACON-WARNING LED	
BZ1	33022643		BUZZER REVERSE GEAR BATTERY KIT	
C1	33023729		CONNECTOR 320A BLUE SIP	
ES0	33017449		CONTACTOR UNIPOLAR 48V	
ES1	909 6622 000		Relais 24 V 40 A	
ES2	909 6622 000		Relais 24 V 40 A	
ES3	146 1646 000		RELAY 24V	
F0	33008583		POWER FUSE 250A	
F1	33023236		CIRCUIT BREAKER 10A PKD	
F2	33020282		CIRCUIT BREAKER 5A	
F3	33019709		Sicherungsautomat 2A	
F4	33017360		Sicherung 16A	
F5	33023236		CIRCUIT BREAKER 10A PKD	
F6	33023236		CIRCUIT BREAKER 10A PKD	
F8	33023236		CIRCUIT BREAKER 10A PKD	
F10	909 5101 000		FUSE 30A	
HN	33009017		Horn 48V	
K1	33020442		Schlüsselschalter	
L1/2	33019229		HEADLIGHT 24V	[1]
M1	33015700		Saugmotor 48V	
M2	33017232		Rüttelmotor 48V	
M3	33019726		PUMP WATER 24V KIT	
M5	33020222		FAN AXIAL 48V	
M6	33023036		FAN COOLING MOTOR ELECTRIC KIT	[2]
MP	33022549		MOTOR ELECTRIC AND CABLE EXTENSION KIT	
STR	33023308		GAUGE 48V KIT	
SW1	33018843		Schalterkit	
SW2	33018844		SWITCH HORN KIT	
SW4	1466507000		MICROSWITCH 10A 250V PKD	
SW6	33019325		Schalter / Wasser	
T1	1466193000		RELAY TIMER 20 SECONDS PKD	
T2	1466194000		RELAY TIMER 0.5 SEC. PKD	
T3	1466196000		RELAY TIMER 0.5 SECONDS PKD	

Part Notes:

[1] - SEE TSB-FC-2015-013
[2] - NO LONGER AVAILABLE

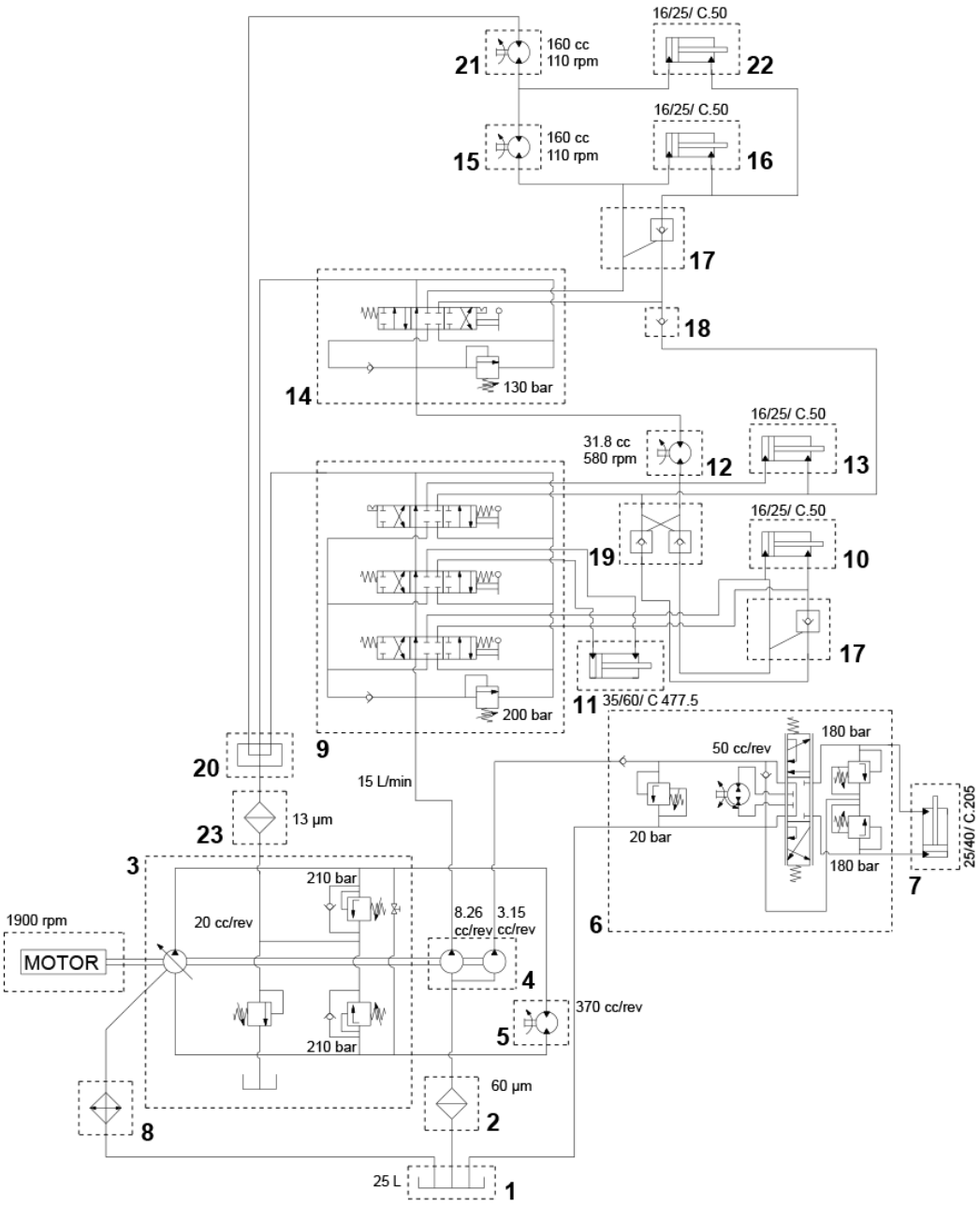
16/25/ C.50
160 cc
110 rpm
21
22
16/25/ C.50
160 cc
110 rpm
15
16
17
18
14
130 bar
16/25/ C.50
31.8 cc
580 rpm
12
13
16/25/ C.50
19
10
17
11
35/60/ C 477.5
200 bar
9
180 bar
50 cc/rev
20
15 L/min
20 bar
180 bar
25/40/ C.205
7
23
13 µm
3
210 bar
1900 rpm
20 cc/rev
8.26
cc/rev
3.15
cc/rev
6
MOTOR
4
370 cc/rev
5
210 bar
60 µm
8
2
25 L
1

Pos.	Artikel-Nr.	Menge	Variante	Notes
1	33018809		TANK OIL KIT	
2	33010199		Hydraulikölfilter SR 1800	
3	33023338		PUMP PISTON 19CC KIT	
4	33023362		PUMP HYDRAULIC TWIN KIT	
5	33019737		Fahrmotor	
6	33022292		STEERING UNIT KIT	
6	33022286		STEERING UNIT HYDROST.POWER 50CC SIP	
7	33018808		CYLINDER POWER STEERING KIT	
8	33018816		Kontrolle Ventil	[1]
9	33018812		Verteiler 3 Elemente Kpl.	
10	33018811		Hydraulik Zylinder	
11	33018802		Zylinder Kit	
12	33023380		MOTOR HYDRAULIC F MAIN BROOM KIT	
13	33021765		MAIN BROOM CYLINDER KIT	
14	33018815		Verteiler 1 Element Kpl.	
15	33018807		Seitenbesenmotor	
16	33021767		SIDE BROOM RIGHT CYLINDER KIT	
17	33018840		Kontrolle Ventil	
18	33010481		Rückschlagventil 3/8	
19	33018816		Kontrolle Ventil	[1]
20	33017432		BLOCK HYD. HOSES	
21	33018807		Seitenbesenmotor	
22	33021766		SIDE BROOM LEFT CYLINDER KIT	
23	33017431		FILTER OIL CPL	

Part Notes:

[1] - GUARANTEE DATE EXPIRED

No Diagram Available

Parts List Only

Pos.	Artikel-Nr.	Menge	Variante	Notes
	33003175	1	Lager konisch	
	1467636000	1	BEARING TAPER ROLLER 32006 SIP	
	33017129	1	Abdichtung	
	33017171	1	Gummi links	
	33017172	1	Gummi Rechts	
	33017173	2	Abdichtung	
	33017174	1	FLAP REAR BROOM	
	33023646	1	LATCH SOFT DRAW RUBBER KIT	
	33017257	1	Kantenschutz	
	33023365	1	GASKET BULB RUBBER L.2930MM SIP	
	33015700	1	Saugmotor 48V	
	33023192	1	GASKET MOTOR VACUUM SIP	
	8-24-04139-1	1	Kassettenfilter, Ultra-Gewebe, Zellulose	
	33018634	1	Abdichtung Filter	
	33017232	1	Rüttelmotor 48V	
	33021313	1	Seitenbesen PPL	
	33017255	1	Seitenbesen PP 1,5/ 260x550 mm	
	33019102	1	Seitenbesen Stift Kit	
	33010199	1	Hydraulikölfilter SR 1800	
	33011530	1	Deckel	
	33018812	1	Verteiler 3 Elemente Kpl.	
	33018815	1	Verteiler 1 Element Kpl.	
	33018816	1	Kontrolle Ventil	[1]
	33018817	1	Kontrolle Ventil Doppel	
	33018840	2	Kontrolle Ventil	
	33020222	1	FAN AXIAL 48V	
	33017199	1	Federspanner Kit	
	33017259	1	MAT PEDAL	
	33018841	1	Fußpedal Kit	
	33018843	1	Schalterkit	
	33018844	1	SWITCH HORN KIT	
	33023308	1	GAUGE 48V KIT	
	33017375	1	DECAL CONTROL PANEL	
	33020442	1	Schlüsselschalter	
	1467014000	1	KEY F STARTER SWITCH 2 PCS SET	
	1466194000	1	RELAY TIMER 0.5 SEC. PKD	
	33017356	1	Batterierelaiskabel	
	1466196000	1	RELAY TIMER 0.5 SECONDS PKD	
	33017360	1	Sicherung 16A	
	33018853	1	Kehrwalze V-Form PP 0,7/ 310x900 mm	
	33002106	1	Federspanner Kit	
	33023472	1	SUPPORT BEARING KIT	
	33018867	1	Federspanner Kit	
	33018868	1	Hauptkehrwalzantrieb Kit	
	33018869	1	LEVER F MAIN BROOM LIFTING KIT	
	33023036	1	FAN COOLING MOTOR ELECTRIC KIT	[2]
	33019625	1	CARBON BRUSH 4 PCS SET	[3]
	33022549	1	MOTOR ELECTRIC AND CABLE EXTENSION KIT	
	33023236	3	CIRCUIT BREAKER 10A PKD	
	33017357	1	HARNESS REAR COVER BATTERY	
	33023124	1	WHEEL SUPERELASTIC CONTINENTAL 4.00/8SIP	
	33022519	1	Räder Superelastisch	
	33017376	1	HARNESS MACHINE BATTERY	
	33023690	1	HARNESS BATT.AND EL.COMPONENTS EU SIP	
	909 5101 000	1	FUSE 30A	
	33023729	1	CONNECTOR 320A BLUE SIP	
	33008583	1	POWER FUSE 250A	
	33017449	1	CONTACTOR UNIPOLAR 48V	
	80562010	1	Nassbatterie inkl. 2xTrog, 48V-375 Ah	

Part Notes:

[1] - GUARANTEE DATE EXPIRED
[2] - NO LONGER AVAILABLE
[3] - STOCK COVERS GUARANTEE

No Diagram Available

Parts List Only

Pos.	Artikel-Nr.	Menge	Variante	Notes
	80554842	1	CHARGER HF 48V 60A R320	
	56382789	1	Kassettenfilter Polyester	
	56507740	1	Taschenfilter, wasserfest	[1]
	33019556	1	Armlehne-Set rechts	
	33018889	1	Seitenbesen Stahlmix/PP, 260x550 mm	
	33023366	1	BROOM SIDE 260X550 NYLON	
	33019573	1	Schmutzbehälterschutz	
	56507029	1	Schmutzbehälter	
	33018852	1	Kehrwalze V-Form Nylon/ 310x900 mm	
	33018854	1	Kehrwalze Stahlmix/PP 0,7/ 310x900 mm	
	33019172	1	Rad Voll-Gummi Set, n. mark.	
	56510893	1	BEACON-WARNING LED	
	33018855	1	Kehrwalze V-Vorm	[2]
	33019173	1	Seitenbesen-Set, PP, links	
	33019173	1	Seitenbesen-Set, PP, links	
	33019572	1	Stoßfängerschutz-Set	
	33019377	1	Staubbindesystem 48V	
	33019172	1	Rad Voll-Gummi Set, n. mark.	
	33019171	1	Fahrerschutzdach-Set	
	56508709	1	NOZZLE SPRAY .10	
	56507908	1	Kappe für Düse	
	33019177	1	Taschenfilter-Set 48V	[3]
	33019174	1	Lenkrad-Set, einstellbar	
	33020056	1	Filtersensor-Set	
	33019177	1	Taschenfilter-Set 48V	[3]
	56507740	1	Taschenfilter, wasserfest	[1]
	56508663	1	MIRROR KIT FOR CAB AND OHG	[4]
	33019171	1	Fahrerschutzdach-Set	
	33023366	1	BROOM SIDE 260X550 NYLON	
	33019554	1	Sicherheitsgurt-Set	
	33019556	1	Armlehne-Set rechts	
	56507033	1	Motorluftvorfilter	
	33019560	1	LIGHT FRONT 48V KIT	[5]
	33019570	1	Fußboden Matte	
	33019572	1	Stoßfängerschutz-Set	
	33018854	1	Kehrwalze Stahlmix/PP 0,7/ 310x900 mm	
	33018852	1	Kehrwalze V-Form Nylon/ 310x900 mm	
	33019560	1	LIGHT FRONT 48V KIT	[5]
	33019573	1	Schmutzbehälterschutz	
	33020361	1	LIMITING SPEED KIT RETROFIT	
	33019570	1	Fußboden Matte	
	56510893	1	BEACON-WARNING LED	
	56507830	1	LAMP 12V	
	33021392	1	HOPPER PROTECTION KIT	
	56507830	1	LAMP 12V	
	56507830	1	LAMP 12V	
	56305627	1	TROUBLE LAMP	[6]
	33019571	1	Anfahrschutz-Set	
	33019574	1	BACKUP ALARM KIT	[7]
	56305518	1	SWITCH VACUUM	
	56507029	1	Schmutzbehälter	
	56507916	1	Rückschlagventil	
	33018855	1	Kehrwalze V-Vorm	[2]
	56507040	1	Fahrersitz, gefedert	
	33020056	1	Filtersensor-Set	
	56305518	1	SWITCH VACUUM	
	33019554	1	Sicherheitsgurt-Set	
	56507038	1	Rundumlicht	
	33022681	1	HARDWARE BEACON KIT	

Pos.	Artikel-Nr.	Menge	Variante	Notes
	80554842	1	CHARGER HF 48V 60A R320	
	33019174	1	Lenkrad-Set, einstellbar	
	33019571	1	Anfahrschutz-Set	
	56507033	1	Motorluftvorfilter	
	33018889	1	Seitenbesen Stahlmix/PP, 260x550 mm	
	33023296	1	SEAT SUSPENSION SIP	
	80562010	1	Nassbatterie inkl. 2xTrog, 48V-375 Ah	
	56507039	1	Rundumlicht	
	56507916	1	Rückschlagventil	
	56507038	1	Rundumlicht	[8]
	56507039	1	Rundumlicht	[9]
	56508709	1	NOZZLE SPRAY .10	
	56507908	1	Kappe für Düse	
	56382789	1	Kassettenfilter Polyester	
	56456590	1	Gas Tank	
	33020361	1	LIMITING SPEED KIT RETROFIT	
	33021392	1	HOPPER PROTECTION KIT	
	33019377	1	Staubbindesystem 48V	
	33021975	1	GAS SPRING KIT	
	33022681		HARDWARE BEACON KIT	

Part Notes:

[1] - EXPIRED ON 10/5/2018
[2] - see PI 2014-003 TTY
[3] - 2020 ACCESSORY PRUNING
[4] - COMPLEXITY REDUCTION
[5] - SEE TSB-FC-2015-013
[6] - NO LONGER AVAILABLE
[7] - SEE TSB-FC-2013-148
[8] - 56040898 - INSTRUCTION SHEET
[9] - 56040899 - INSTRUCTION SHEET

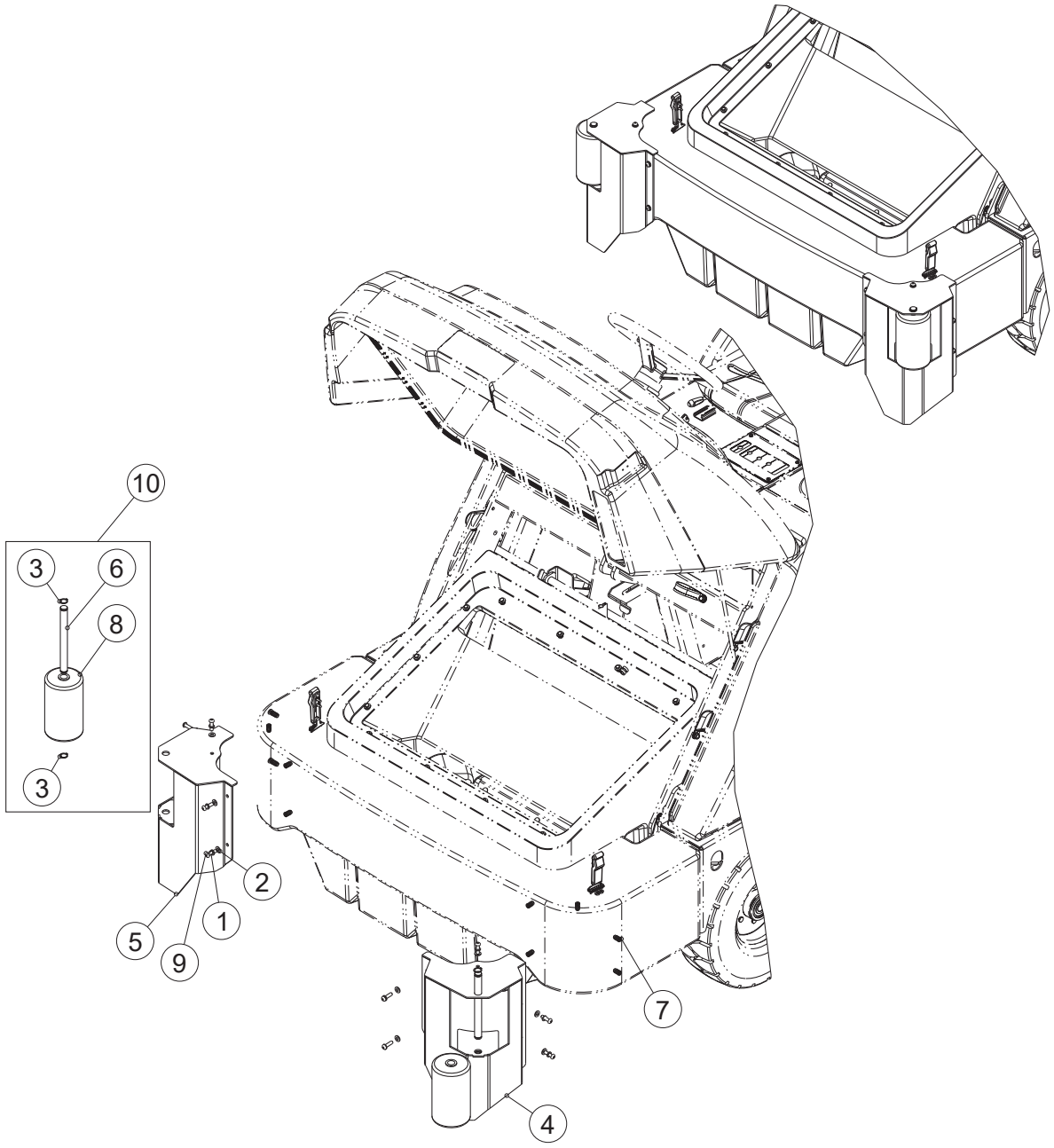
10
3
6
8
3
2
5
1
9
7
4

Pos.	Artikel-Nr.	Menge	Variante	Notes
	33019571	1	Anfahrschutz-Set	[1]
1		10	WASHER SPRING LOCK M8 DIN127-B	
2		10	WASHER PLAIN M8X16 ISO7089	
3		4	SHAFT RING D.19	
4		1	GUARD LEFT SIDE BROOM	
5		1	GUARD RIGHT SIDE BROOM	
6		2	PIN ROLLER SIDE BROOM PROTECTION	
7		10	SLEEVE M8 W/HEX	
8		2	BUMPER	
9		10	SCREW M8X30 BUTTON HD HEX SOCK ISO7380	
10	33023882	1	BUMPER PIVOT KIT	

Part Notes:

[1] - IS_33019203_INSTRUCTIONS INSTALL. KIT 33019571

© 2023 - Nilfisk A/S