PARTS LIST



2025.08.30

TABLE OF CONTENTS

L28 - 1 1
L28 - 2 5
L28 - 3 9
L28 - 4 13
L28 - 5 17
L28 - 6 19
L28 - 7 21

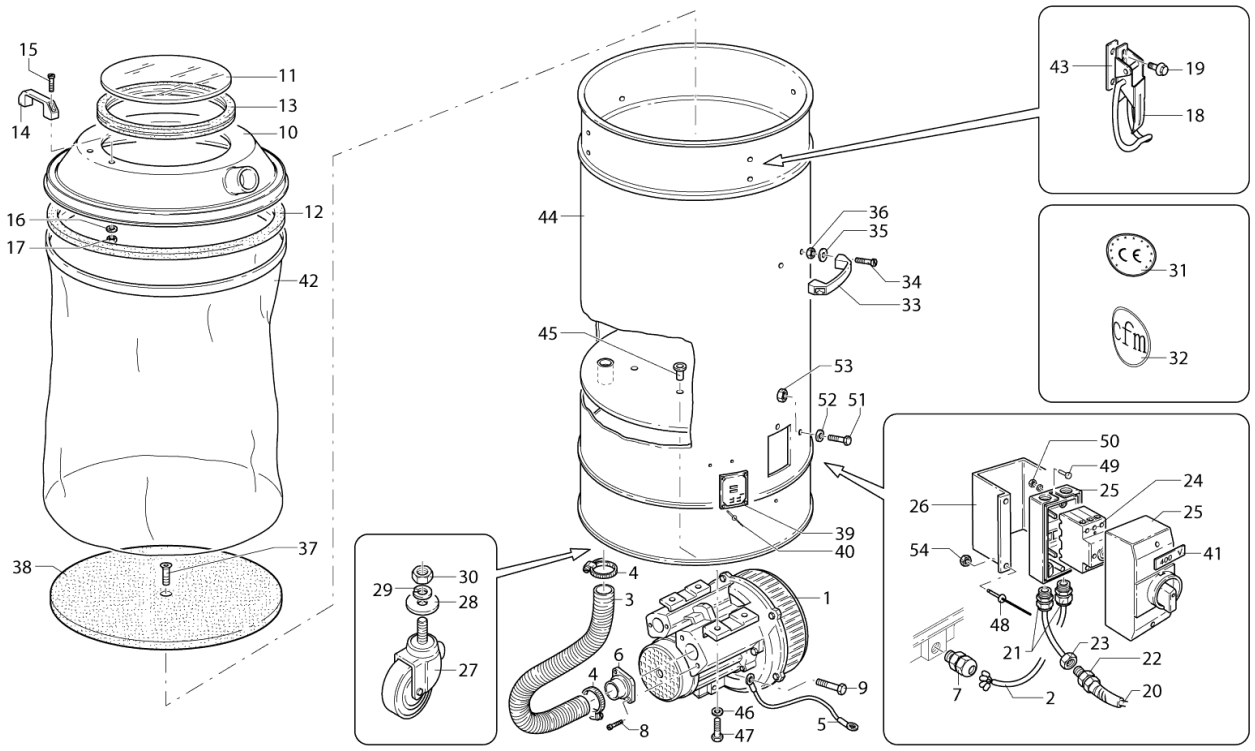
15
14
11
13
10
16
17
12
42
38
37
44
36
35
34
33
45
53
52
51
39
40
4
3
1
6
4
8
9
46
47
5
29
30
28
27
43
19
18
31
32
50
49
25
24
26
25
54
41
48
21
23
22
7
2
20

Pos.	Artikel-Nr.	Menge	Variante	Notes
01	Z4 55010 HP1	1	Nilfisk Hochleistungs-Verdichter KW 0.75	
02	Z8 39028	1	Kabel	[1]
03	Z7 24111	1	Schlauch ölbeständigper Meter CFM	[2]
04	Z8 40040	2	Schlauchklammer aus Metall ;40-60	
05	Z8 39668	1	Kabel	
06	Z8 40106	1	Anschluß-Flansch D50 #550	
07	Z8 39793	1	Verschraubung M25	
08	ZBVTCCE0816X	2		[3]
08	ZBVTCCE0816ZB	2		[4]
09	ZBVATE0510X	1		[5]
09	ZBVATE0510ZB	1		[6]
10	Z8 12079	1	CAP D460 INOX HOLE D50 MOD. R	[1]
10	Z8 12109	1	IRON COVER FOR MODEL R D460	
11	Z8 12140	1	Sichtfenster D270 Mod R	
12	Z8 17223	1	Kesseldichtung R 305 V	
13	Z8 17254	1	Dichtung D270 für Sichtfe	
14	Z8 40038	2	Griff PVC	
15	ZBVTCCE0816X	4		[3]
15	ZBVTCCE0816ZB	4		[4]
16	ZBRO0832X	4		[7]
16	ZBRO0832ZB	4		[8]
17	ZBDN08X	4		[9]
17	ZBDN08ZB	4		[10]
18	Z8 36030	4	Spannverschlüsse V2A	
18	Z8 36028	4	Spannbügel FE	
19	ZBVTEZ0608X	8		[11]
19	ZBVTEZ0608ZB	8		[12]
20	Z8 39024	1	Kabel	
21	Z8 39055	2	Kabelverschraubung PG 16	
22	Z8 39097	1	Zugentlastung	
23	Z8 39567	1	Metallring	
24	Z8 39678	1	Motorschutzschalter	
25	Z8 39947	1	Gehäuseschutz für Schalte	
26	Z8 16254	1	SUPPORT BOARD MOD. R	[13]
27	Z8 40001	4	PIVOTING WHEEL D60 M12GREY CONTAINERS	
28	ZBRO1236X	4		[14]
28	ZBRO1236ZB	4		[15]
29	ZBROG12ZB	4		[16]
29	ZBROG12X	4		[17]
30	ZBDN12ZB	4		[18]
30	ZBDN12X	4		[19]
31	Z8 17349	1	CE MARK LABEL	[20]
32	Z8 17083	1	GREEN LABEL CFM BIG GREEN	[21]
32	Z8 17340	1	LABEL CFM BIG WHITE	[21]
33	Z8 40038	2	Griff PVC	
34	ZBVTCCE0816ZB	4		[4]
34	ZBVTCCE0816X	4		[3]
35	ZBRO0832ZB	4		[8]
35	ZBRO0832X	4		[7]
36	ZBDN08ZB	4		[10]
36	ZBDN08X	4		[9]
37	ZBVTSP0625ZB	1		[22]
37	ZBVTSP0625X	1		[23]
38	Z8 12042	1	Sicherheitssieb für Mod.	
39	Z8 17015	1	Typenschilder für Drehstr	[24]
40	ZBRI0307A	4		[25]
41	Z8 17089	1	Aufkleber 400V	
42	Z8 17090	1	Filtersack Ø460mm Nylon (R-Modelle)	
43	Z8 18010	4	Gegenplatte Spannbügel	

Pos.	Artikel-Nr.	Menge	Variante	Notes
44	Z8 30034	1	CONTAINER D460x970 INOX MOD. R	[13]
44	Z8 30035	1	Behälter D460x970 FE MOD. R	[1]
45	Z8 38037	4	THREADED INSERT M8	[1]
46	ZBRO0824X	4		[26]
46	ZBRO0824ZB	4		[27]
47	ZBVTE0825ZB	4		[28]
47	ZBVTE0825X	4		[29]
48	ZBRI0410A	4		[30]
49	ZBVTBC0412X	2		[31]
49	ZBVTBC0412ZB	2		[32]
50	ZBDN04X	2		[33]
50	ZBDN04ZB	2		[34]
51	ZBVTBC0610ZB	1		[35]
51	ZBVTBC0610X	1		[36]
52	ZBRO06ZB	1		[37]
52	ZBRO06X	1		[38]
53	ZBDN06X	1		[39]
53	ZBDN06ZB	1		[40]
54	ZBRO04ZB	1		[41]
54	ZBRO04X	1		[42]
55	Z4 55R104	1	SUCTION UNIT KW0.74V400/50 COMPLETE x	[43]
56	Z8 31261	1	Deckel D460 INOX COMPL.MOD.R	[1]
56	Z8 31260	1	Deckel Mod.R104-R154 D460	

Part Notes:

[1] - CONTACT PM IN ZOCCA
[2] - SEE PB13-2011
[3] - ZBVTCCE0816X
[4] - ZBVTCCE0816ZB
[5] - ZBVATE0510X
[6] - ZBVATE0510ZB
[7] - ZBRO0832X
[8] - ZBRO0832ZB
[9] - ZBDN08X
[10] - ZBDN08ZB
[11] - ZBVTEZ0608X
[12] - ZBVTEZ0608ZB
[13] - SEE SM-SP-007
[14] - ZBRO1236X
[15] - ZBRO1236ZB
[16] - ZBROG12ZB
[17] - ZBROG12X
[18] - ZBDN12ZB
[19] - ZBDN12X
[20] - CONTACT PROD MANAGEMENT
[21] - NO MORE AVAILABLE
[22] - ZBVTSP0625ZB
[23] - ZBVTSP0625X
[24] - GUARANTEE PERIOD EXPIRED
[25] - ZBRI0307A
[26] - ZBRO0824X
[27] - ZBRO0824ZB
[28] - ZBVTE0825ZB
[29] - ZBVTE0825X
[30] - ZBRI0410A
[31] - ZBVTBC0412X
[32] - ZBVTBC0412ZB
[33] - ZBDN04X
[34] - ZBDN04ZB

[35] - ZBVTBC0610ZB
[36] - ZBVTBC0610X
[37] - ZBRO06ZB
[38] - ZBRO06X
[39] - ZBDN06X
[40] - ZBDN06ZB
[41] - ZBRO04ZB
[42] - ZBRO04X
[43] - Z4 55R104
CONTACT PM IN ZOCCA

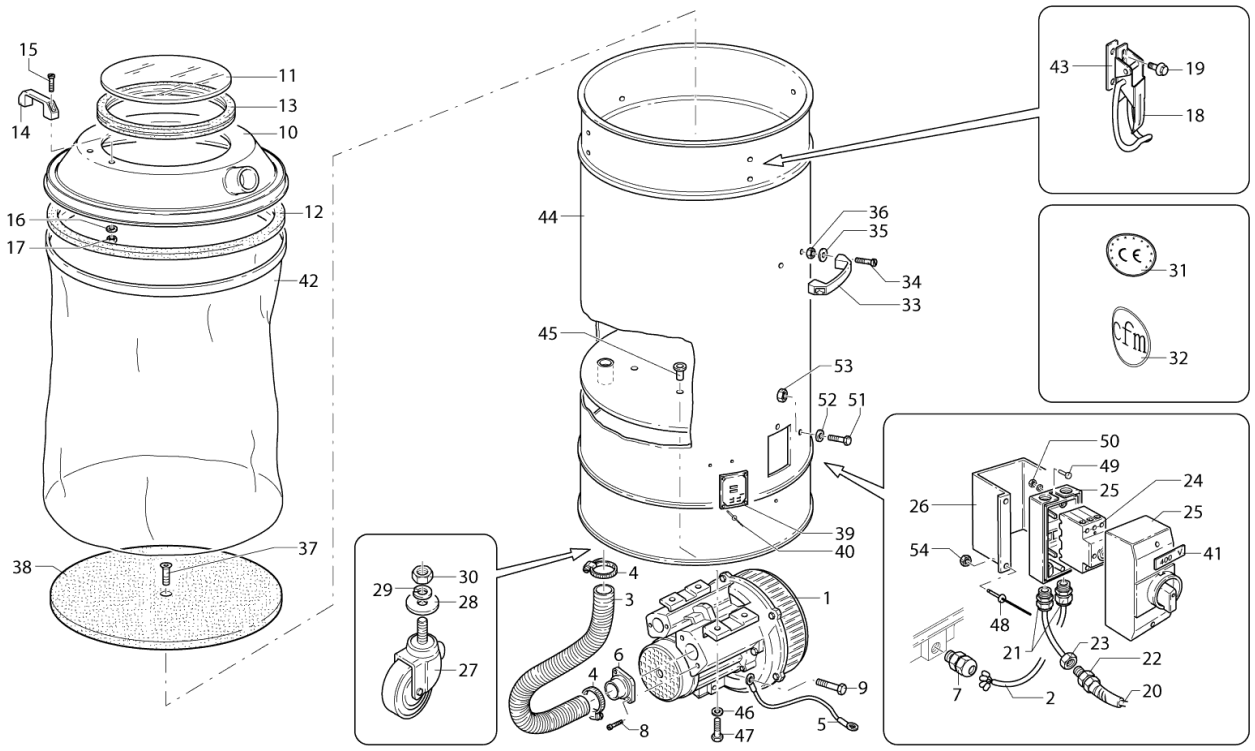
15
14
11
13
10
16
17
12
42
38
37
43
19
18
44
36
35
34
33
31
32
45
53
52
51
50
49
24
25
26
25
54
41
39
40
30
29
28
27
4
3
1
6
4
8
9
46
47
5
48
21
23
22
7
2
20

Pos.	Artikel-Nr.	Menge	Variante	Notes
01	4085500449	1	SUCTION UNIT KW1,3 COMP.230/400 R154	
02	Z8 39235	1	CABLE CONN.MOT. 4G1.5 FROR MOD.R104-R154	[1]
03	Z7 24111	1	Schlauch ölbeständigper Meter CFM	[2]
04	Z8 40040	2	Schlauchklammer aus Metall ;40-60	
05	Z8 39668	1	Kabel	
08	ZBVTCCE0816X	2		[3]
08	ZBVTCCE0816ZB	2		[4]
09	ZBVATE0510X	1		[5]
09	ZBVATE0510ZB	1		[6]
10	Z8 12079	1	CAP D460 INOX HOLE D50 MOD. R	[1]
10	Z8 12109	1	IRON COVER FOR MODEL R D460	
11	Z8 12140	1	Sichtfenster D270 Mod R	
12	Z8 17223	1	Kesseldichtung R 305 V	
13	Z8 17254	1	Dichtung D270 für Sichtfe	
14	Z8 40038	2	Griff PVC	
15	ZBVTCCE0816X	4		[3]
15	ZBVTCCE0816ZB	4		[4]
16	ZBRO0832X	4		[7]
16	ZBRO0832ZB	4		[8]
17	ZBDN08X	4		[9]
17	ZBDN08ZB	4		[10]
18	Z8 36030	4	Spannverschlüsse V2A	
18	Z8 36028	4	Spannbügel FE	
19	ZBVTEZ0608X	8		[11]
19	ZBVTEZ0608ZB	8		[12]
20	Z8 39024	1	Kabel	
21	Z8 39055	2	Kabelverschraubung PG 16	
22	Z8 39097	1	Zugentlastung	
23	Z8 39567	1	Metallring	
24	Z8 39678	1	Motorschutzschalter	
25	Z8 39947	1	Gehäuseschutz für Schalte	
26	Z8 16254	1	SUPPORT BOARD MOD. R	[13]
27	Z8 40001	4	PIVOTING WHEEL D60 M12GREY CONTAINERS	
28	ZBRO1236X	4		[14]
28	ZBRO1236ZB	4		[15]
29	ZBROG12X	4		[16]
29	ZBROG12ZB	4		[17]
30	ZBDN12ZB	4		[18]
30	ZBDN12X	4		[19]
31	Z8 17349	1	CE MARK LABEL	[20]
32	Z8 17340	1	LABEL CFM BIG WHITE	[21]
32	Z8 17083	1	GREEN LABEL CFM BIG GREEN	[21]
33	Z8 40038	2	Griff PVC	
34	ZBVTCCE0816X	4		[3]
34	ZBVTCCE0816ZB	4		[4]
35	ZBRO0832ZB	4		[8]
35	ZBRO0832X	4		[7]
36	ZBDN08ZB	4		[10]
36	ZBDN08X	4		[9]
37	ZBVTSP0625ZB	1		[22]
37	ZBVTSP0625X	1		[23]
38	Z8 12042	1	Sicherheitssieb für Mod.	
39	Z8 17015	1	Typenschilder für Drehstr	[24]
40	ZBRI0307A	4		[25]
41	Z8 17089	1	Aufkleber 400V	
42	Z8 17090	1	Filtersack Ø460mm Nylon (R-Modelle)	
43	Z8 18010	4	Gegenplatte Spannbügel	
44	Z8 30034	1	CONTAINER D460x970 INOX MOD. R	[13]
44	Z8 30035	1	Behälter D460x970 FE MOD. R	[1]

Pos.	Artikel-Nr.	Menge	Variante	Notes
45	Z8 38037	4	THREADED INSERT M8	[1]
46	ZBRO0824X	4		[26]
46	ZBRO0824ZB	4		[27]
47	ZBVTE0830X	4		[28]
47	ZBVTE0830ZB	4		[29]
48	ZBRI0410A	4		[30]
49	ZBVTBC0412X	2		[31]
49	ZBVTBC0412ZB	2		[32]
50	ZBDN04X	2		[33]
50	ZBDN04ZB	2		[34]
51	ZBVTBC0610X	1		[35]
51	ZBVTBC0610ZB	1		[36]
52	ZBRO06ZB	1		[37]
52	ZBRO06X	1		[38]
53	ZBDN06ZB	1		[39]
53	ZBDN06X	1		[40]
54	ZBRO04X	1		[41]
54	ZBRO04ZB	1		[42]
55	Z4 54R154	1	SUCTION UNIT KW1.1V400/50 COMPLETE x	[43]
56	Z8 31261	1	Deckel D460 INOX COMPL.MOD.R	[1]
56	Z8 31260	1	Deckel Mod.R104-R154 D460	

Part Notes:

[1] - CONTACT PM IN ZOCCA
[2] - SEE PB13-2011
[3] - ZBVTCCE0816X
[4] - ZBVTCCE0816ZB
[5] - ZBVATE0510X
[6] - ZBVATE0510ZB
[7] - ZBRO0832X
[8] - ZBRO0832ZB
[9] - ZBDN08X
[10] - ZBDN08ZB
[11] - ZBVTEZ0608X
[12] - ZBVTEZ0608ZB
[13] - SEE SM-SP-007
[14] - ZBRO1236X
[15] - ZBRO1236ZB
[16] - ZBROG12X
[17] - ZBROG12ZB
[18] - ZBDN12ZB
[19] - ZBDN12X
[20] - CONTACT PROD MANAGEMENT
[21] - NO MORE AVAILABLE
[22] - ZBVTSP0625ZB
[23] - ZBVTSP0625X
[24] - GUARANTEE PERIOD EXPIRED
[25] - ZBRI0307A
[26] - ZBRO0824X
[27] - ZBRO0824ZB
[28] - ZBVTE0830X
[29] - ZBVTE0830ZB
[30] - ZBRI0410A
[31] - ZBVTBC0412X
[32] - ZBVTBC0412ZB
[33] - ZBDN04X
[34] - ZBDN04ZB
[35] - ZBVTBC0610X
[36] - ZBVTBC0610ZB

[37] - ZBRO06ZB
[38] - ZBRO06X
[39] - ZBDN06ZB
[40] - ZBDN06X
[41] - ZBRO04X
[42] - ZBRO04ZB
[43] - Z4 54R154
CONTACT PM IN ZOCCA

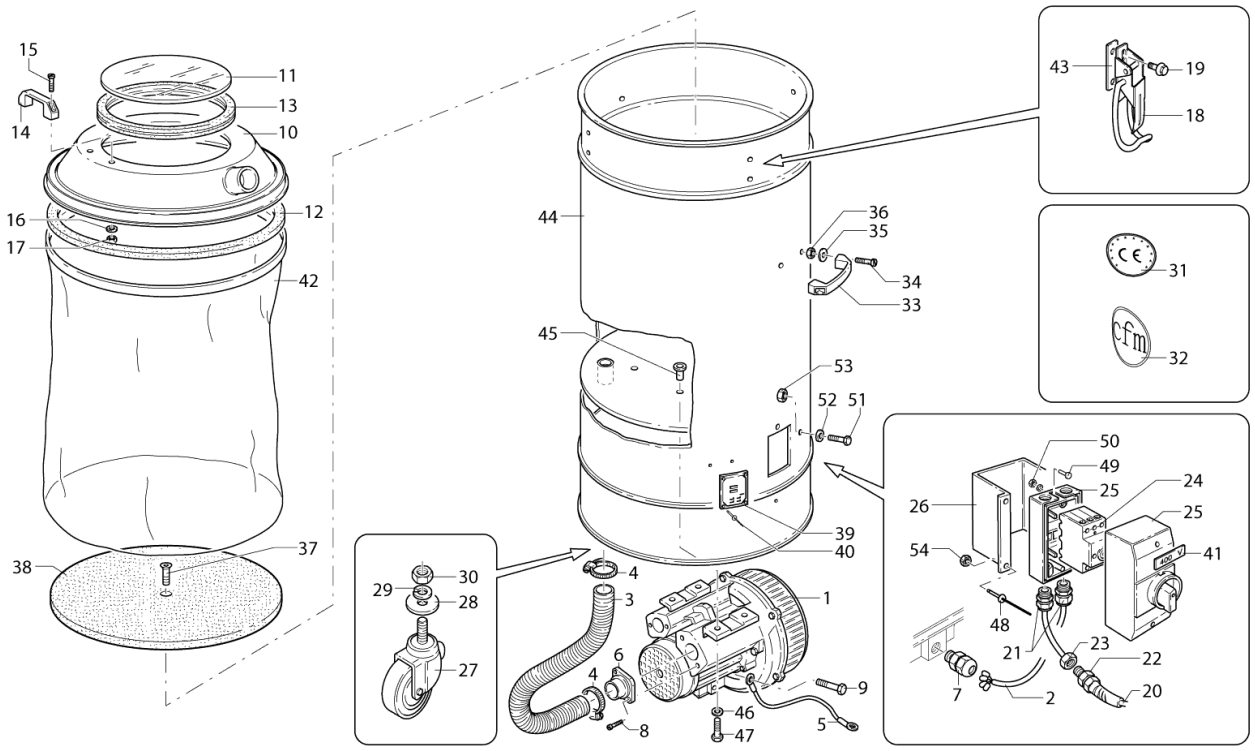
15
14
11
13
10
16
17
12
42
38
37
44
36
35
34
33
45
53
52
51
39
40
4
3
1
6
4
8
9
46
47
5
29
30
28
27
43
19
18
31
32
50
49
25
24
26
25
54
41
48
21
23
22
7
2
20

Pos.	Artikel-Nr.	Menge	Variante	Notes
01	4085500452	1	SUCTION UNIT KW1,6 COMP.230/400V R155	[1]
01	4085500449	1	SUCTION UNIT KW1,3 COMP.230/400 R154	
02	Z8 39235	1	CABLE CONN.MOT. 4G1.5 FROR MOD.R104-R154	[1]
03	Z7 24111	1	Schlauch ölbeständigper Meter CFM	[2]
04	Z8 40040	2	Schlauchklammer aus Metall ;40-60	
05	Z8 39668	1	Kabel	
08	ZBVTCCE0816X	2		[3]
08	ZBVTCCE0816ZB	2		[4]
09	ZBVATE0510X	1		[5]
09	ZBVATE0510ZB	1		[6]
10	4083101157	1	CAP D560 FE COMPL. MOD. R INLET D70	[7]
10	4083101160	1	Deckel kpl. D560	[8]
10	Z8 12121	1	CAP D560 INOX HOLE D50 MOD. R	[1]
10	Z8 12120	1	CAP D560 FE HOLE D50 MOD. R	[1]
11	Z8 12140	1	Sichtfenster D270 Mod R	
12	Z8 17223	1	Kesseldichtung R 305 V	
13	Z8 17254	1	Dichtung D270 für Sichtfe	
14	Z8 40038	2	Griff PVC	
15	ZBVTCCE0816X	4		[3]
15	ZBVTCCE0816ZB	4		[4]
16	ZBRO0832X	4		[9]
16	ZBRO0832ZB	4		[10]
17	ZBDN08X	4		[11]
17	ZBDN08ZB	4		[12]
18	Z8 36030	4	Spannverschlüsse V2A	
18	Z8 36028	4	Spannbügel FE	
19	ZBVTEZ0608X	8		[13]
19	ZBVTEZ0608ZB	8		[14]
20	Z8 39024	1	Kabel	
21	Z8 39055	2	Kabelverschraubung PG 16	
22	Z8 39060	1	Kabeldurchführung PG 16/	
23	Z8 39568	1	Nutmutter	
24	Z8 39678	1	Motorschutzschalter	
25	Z8 39947	1	Gehäuseschutz für Schalte	
26	Z8 16254	1	SUPPORT BOARD MOD. R	[15]
27	Z8 40009	4	Lenkrolle	
28	ZBRO1236X	4		[16]
28	ZBRO1236ZB	4		[17]
29	ZBROG12X	4		[18]
29	ZBROG12ZB	4		[19]
30	ZBDN12ZB	4		[20]
30	ZBDN12X	4		[21]
31	Z8 17349	1	CE MARK LABEL	[22]
32	Z8 17340	1	LABEL CFM BIG WHITE	[23]
32	Z8 17083	1	GREEN LABEL CFM BIG GREEN	[23]
33	Z8 40038	2	Griff PVC	
34	ZBVTCCE0816X	4		[3]
34	ZBVTCCE0816ZB	4		[4]
35	ZBRO0832ZB	4		[10]
35	ZBRO0832X	4		[9]
36	ZBDN08ZB	4		[12]
36	ZBDN08X	4		[11]
37	ZBVTSP0625ZB	1		[24]
37		1	ZBVTSP0625X	[25]
37	ZBVTSP0625X	1		[25]
38	Z8 12043	1	Siebeinsatz D560 für Mod.	
38	Z8 12043	1	Siebeinsatz D560 für Mod.	
39	Z8 17015	1	Typenschilder für Drehstr	[26]
39	Z8 17015	1	Typenschilder für Drehstr	[26]

Pos.	Artikel-Nr.	Menge	Variante	Notes
40		4	ZBRI0307A	[27]
40	ZBRI0307A	4		[27]
41	Z8 17089	1	Aufkleber 400V	
41	Z8 17089	1	Aufkleber 400V	
42	Z8 17094	1	Taschenfilter Ø560mm Nylon	
42	Z8 17094	1	Taschenfilter Ø560mm Nylon	
43	Z8 18010	4	Gegenplatte Spannbügel	
43	Z8 18010	4	Gegenplatte Spannbügel	
44	Z8 30082	1	CONTAINER D560x970 INOX MOD. R	[1]
44	Z8 30083	1	Behälter D560x970 Mod.R F	
44	Z8 30083	1	Behälter D560x970 Mod.R F	
44	Z8 30082	1	CONTAINER D560x970 INOX MOD. R	[1]
45	Z8 38037	4	THREADED INSERT M8	[1]
45	Z8 38037	4	THREADED INSERT M8	[1]
46		4	ZBRO0824X	[28]
46	ZBRO0824X	4		[28]
46		4	ZBRO0824ZB	[29]
46	ZBRO0824ZB	4		[29]
47		4	ZBVTE0825X	[30]
47		4	ZBVTE0825ZB	[31]
47	ZBVTE0830X	4		[32]
47	ZBVTE0830ZB	4		[33]
48	ZBRI0410A	4		[34]
48		4	ZBRI0410A	[34]
49	ZBVTBC0412X	2		[35]
49	ZBVTBC0412ZB	2		[36]
49		2	ZBVTBC0412X	[35]
49		2	ZBVTBC0412ZB	[36]
50		2	ZBDN04X	[37]
50	ZBDN04ZB	2		[38]
50		2	ZBDN04ZB	[38]
50	ZBDN04X	2		[37]
51	ZBVTBC0610X	1		[39]
51	ZBVTBC0610ZB	1		[40]
51		1	ZBVTBC0610X	[39]
51		1	ZBVTBC0610ZB	[40]
52		1	ZBRO06X	[41]
52	ZBRO06X	1		[41]
52	ZBRO06ZB	1		[42]
52		1	ZBRO06ZB	[42]
53		1	ZBDN06X	[43]
53	ZBDN06X	1		[43]
53	ZBDN06ZB	1		[44]
53		1	ZBDN06ZB	[44]
54	ZBRO04X	1		
54	ZBRO04ZB	1		[45]
54		1	ZBRO04ZB	[45]
55	Z4 54R154	1	SUCTION UNIT KW1.1V400/50 COMPLETE x	[1]
56	Z8 31262	1	Haube D560 kpl.	
56	Z8 31263	1	Deckel D560 V2A Mod.R kom	

Part Notes:

[1] - CONTACT PM IN ZOCCA
[2] - SEE PB13-2011
[3] - ZBVTCCE0816X
[4] - ZBVTCCE0816ZB
[5] - ZBVATE0510X
[6] - ZBVATE0510ZB
[7] - Including handle and bent coupling

[8]	-	CONTACT PM IN ZOCCA Including handle and bent coupling
[9]	-	ZBRO0832X
[10]	-	ZBRO0832ZB
[11]	-	ZBDN08X
[12]	-	ZBDN08ZB
[13]	-	ZBVTEZ0608X
[14]	-	ZBVTEZ0608ZB
[15]	-	SEE SM-SP-007
[16]	-	ZBRO1236X
[17]	-	ZBRO1236ZB
[18]	-	ZBROG12X
[19]	-	ZBROG12ZB
[20]	-	ZBDN12ZB
[21]	-	ZBDN12X
[22]	-	CONTACT PROD MANAGEMENT
[23]	-	NO MORE AVAILABLE
[24]	-	ZBVTSP0625ZB
[25]	-	ZBVTSP0625X
[26]	-	GUARANTEE PERIOD EXPIRED
[27]	-	ZBRI0307A
[28]	-	ZBRO0824X
[29]	-	ZBRO0824ZB
[30]	-	ZBVTE0825X
[31]	-	ZBVTE0825ZB
[32]	-	ZBVTE0830X
[33]	-	ZBVTE0830ZB
[34]	-	ZBRI0410A
[35]	-	ZBVTBC0412X
[36]	-	ZBVTBC0412ZB
[37]	-	ZBDN04X
[38]	-	ZBDN04ZB
[39]	-	ZBVTBC0610X
[40]	-	ZBVTBC0610ZB
[41]	-	ZBRO06X
[42]	-	ZBRO06ZB
[43]	-	ZBDN06X
[44]	-	ZBDN06ZB
[45]	-	ZBRO04ZB

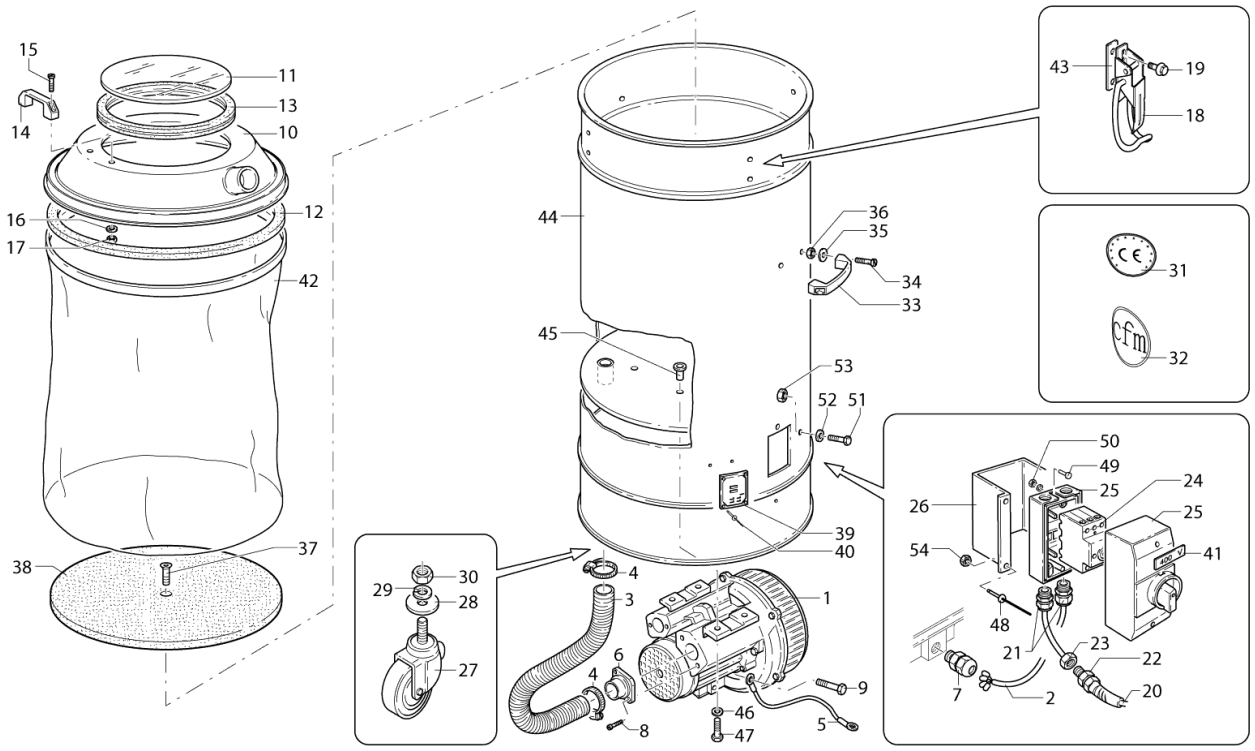
15
14
11
13
10
16
17
12
42
38
37
44
36
35
34
33
45
53
52
51
39
40
4
3
1
6
4
8
9
46
47
5
29
30
28
27
43
19
18
31
32
50
49
25
24
26
25
54
41
48
21
23
22
7
2
20

Pos.	Artikel-Nr.	Menge	Variante	Notes
01	Z4 55030 HP 3	1	Verdichter 2,2 KW	[1]
02	Z8 39285	1	CABLE CONN.MOT. 4G2.5 NE. MOD.3507	
03	Z7 24111	1	Schlauch ölbeständigper Meter CFM	[2]
04	Z8 40040	2	Schlauchklammer aus Metall ;40-60	
05	Z8 39668	1	Kabel	
06	Z8 40106	1	Anschluß-Flansch D50 #550	
07	Z8 39793	1	Verschraubung M25	
08	ZBVTCCE0816X	2		[3]
08	ZBVTCCE0816ZB	2		[4]
09	ZBVATE0510X	1		[5]
09	ZBVATE0510ZB	1		[6]
10	Z8 12121	1	CAP D560 INOX HOLE D50 MOD. R	[7]
10	Z8 12120	1	CAP D560 FE HOLE D50 MOD. R	[7]
11	Z8 12140	1	Sichtfenster D270 Mod R	
12	Z8 17223	1	Kesseldichtung R 305 V	
13	Z8 17254	1	Dichtung D270 für Sichtfe	
14	Z8 40038	2	Griff PVC	
15	ZBVTCCE0816X	4		[3]
15	ZBVTCCE0816ZB	4		[4]
16	ZBRO0832X	4		[8]
16	ZBRO0832ZB	4		[9]
17	ZBDN08X	4		[10]
17	ZBDN08ZB	4		[11]
18	Z8 36030	4	Spannverschlüsse V2A	
18	Z8 36028	4	Spannbügel FE	
19	ZBVTEZ0608X	8		[12]
19	ZBVTEZ0608ZB	8		[13]
20	Z8 39018	1	Anschlußkabel 4G2,5	
21	Z8 39055	2	Kabelverschraubung PG 16	
22	Z8 39060	1	Kabeldurchführung PG 16/	
23	Z8 39568	1	Nutmutter	
24	Z8 39679	1	Motorschutzschalter 4-6,3	
25	Z8 39947	1	Gehäuseschutz für Schalte	
26	Z8 16254	1	SUPPORT BOARD MOD. R	[14]
27	Z8 40009	4	Lenkrolle	
28	ZBRO1236X	4		[15]
28	ZBRO1236ZB	4		[16]
29	ZBROG12ZB	4		[17]
29	ZBROG12X	4		[18]
30	ZBDN12ZB	4		[19]
30	ZBDN12X	4		[20]
31	Z8 17349	1	CE MARK LABEL	[21]
32	Z8 17083	1	GREEN LABEL CFM BIG GREEN	[1]
32	Z8 17340	1	LABEL CFM BIG WHITE	[1]
33	Z8 40038	2	Griff PVC	
34	ZBVTCCE0816ZB	4		[4]
34	ZBVTCCE0816X	4		[3]
35	ZBRO0832ZB	4		[9]
35	ZBRO0832X	4		[8]
36	ZBDN08ZB	4		[11]
36	ZBDN08X	4		[10]
37	ZBVTSP0625ZB	1		[22]
37	ZBVTSP0625X	1		[23]
38	Z8 12043	1	Siebeinsatz D560 für Mod.	
39	Z8 17015	1	Typenschilder für Drehstr	[24]
40	ZBRI0307A	4		[25]
41	Z8 17089	1	Aufkleber 400V	
42	Z8 17094	1	Taschenfilter Ø560mm Nylon	
43	Z8 18010	4	Gegenplatte Spannbügel	

Pos.	Artikel-Nr.	Menge	Variante	Notes
44	Z8 30082	1	CONTAINER D560x970 INOX MOD. R	[7]
44	Z8 30083	1	Behälter D560x970 Mod.R F	
45	Z8 38037	4	THREADED INSERT M8	[7]
46	ZBRO0824X	4		[26]
46	ZBRO0824ZB	4		[27]
47	ZBVTE0825ZB	4		[28]
47	ZBVTE0825X	4		[29]
48	ZBRI0410A	4		[30]
49	ZBVTBC0412X	2		[31]
49	ZBVTBC0412ZB	2		[32]
50	ZBDN04X	2		[33]
50	ZBDN04ZB	2		[34]
51	ZBVTBC0610ZB	1		[35]
51	ZBVTBC0610X	1		[36]
52	ZBRO06ZB	1		[37]
52	ZBRO06X	1		[38]
53	ZBDN06X	1		[39]
53	ZBDN06ZB	1		[40]
54	ZBRO04ZB	1		[41]
54	ZBRO04X	1		
55	Z4 55R305	1	SUCTION UNIT KW2.2V400/50 COMPLETE x	[7]
56	Z8 31263	1	Deckel D560 V2A Mod.R kom	
56	Z8 31262	1	Haube D560 kpl.	

Part Notes:

[1] - NO MORE AVAILABLE
[2] - SEE PB13-2011
[3] - ZBVTCCE0816X
[4] - ZBVTCCE0816ZB
[5] - ZBVATE0510X
[6] - ZBVATE0510ZB
[7] - CONTACT PM IN ZOCCA
[8] - ZBRO0832X
[9] - ZBRO0832ZB
[10] - ZBDN08X
[11] - ZBDN08ZB
[12] - ZBVTEZ0608X
[13] - ZBVTEZ0608ZB
[14] - SEE SM-SP-007
[15] - ZBRO1236X
[16] - ZBRO1236ZB
[17] - ZBROG12ZB
[18] - ZBROG12X
[19] - ZBDN12ZB
[20] - ZBDN12X
[21] - CONTACT PROD MANAGEMENT
[22] - ZBVTSP0625ZB
[23] - ZBVTSP0625X
[24] - GUARANTEE PERIOD EXPIRED
[25] - ZBRI0307A
[26] - ZBRO0824X
[27] - ZBRO0824ZB
[28] - ZBVTE0825ZB
[29] - ZBVTE0825X
[30] - ZBRI0410A
[31] - ZBVTBC0412X
[32] - ZBVTBC0412ZB
[33] - ZBDN04X
[34] - ZBDN04ZB

[35] - ZBVTBC0610ZB
[36] - ZBVTBC0610X
[37] - ZBRO06ZB
[38] - ZBRO06X
[39] - ZBDN06X
[40] - ZBDN06ZB
[41] - ZBRO04ZB

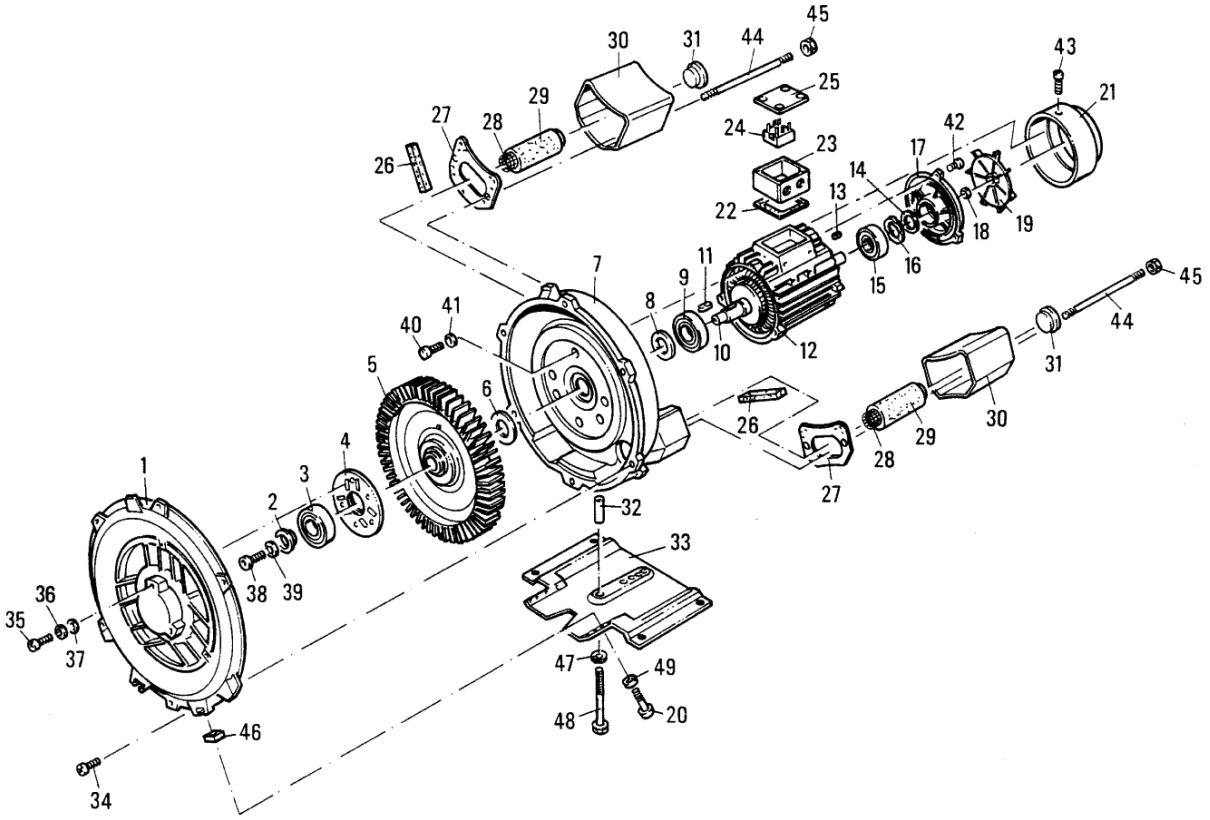
45
30
31
44
43
25
21
29
27
28
24
42
23
17
26
14
13
22
18
19
11
16
7
9
15
45
8
41
44
40
10
12
31
5
6
26
30
29
4
28
1
3
27
2
32
33
36
38
39
35
37
47
49
48
20
46
34

Pos.	Artikel-Nr.	Menge	Variante	Notes
0-	Z8 51813	1		
0-	Z8 51845	1	MOTOR COMPL. MOD.55010	[1]
05	Z8 51044	1	IMPELLER MOD.55010 HP 1	[1]
15	Z8 51460	1	SUPERIOR BEARING MOD.55020	[1]
22	Z8 51280	1		
23	Z8 51232	1		
24	Z8 51264	1	TERMINAL MOD.55020/55030	[2]
25	Z8 51249	1		[2]
26	Z8 51760	2		
29	Z8 51361	2	SOUNDPROOF + MESH 55010	[1]
37	Z8 51541	3	RING MOD.55055-55055W	[1]

Part Notes:

[1] - ORDER COMPLETE BLOWER
[2] - NO MORE AVAILABLE

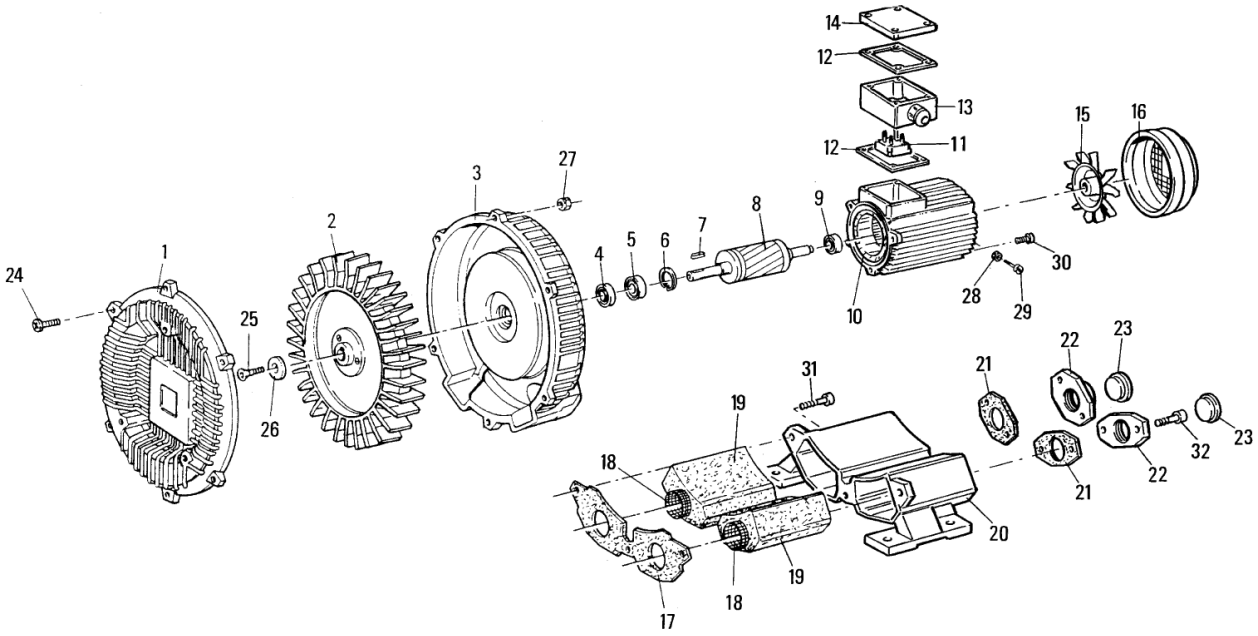
14
12
13
12
11
15
16
3
27
2
8
9
7
4
5
6
1
24
25
26
10
28
29
30
22
23
21
31
19
18
32
23
22
21
20
19
18
17

Pos.	Artikel-Nr.	Menge	Variante	Notes
01	Z8 51003	1	BOTTOM CAP MOD.54015	[1]
02	Z8 51036	1	IMPELLER MOD.54015 HP 1.5 COMPL. W.	[1]
03	Z8 51068	1		
04	Z8 51579	1		
05	Z8 51483	1		
06	Z8 51611	1		
07	Z8 51515	1		
08	Z8 51100	1		
09	Z8 51451	1		
11	Z8 51258	1		
15	Z8 51322	1	COOLING FAN 54004/54010/54015	[1]
16	Z8 51194	1		[1]
17	Z8 51419	1		[1]
18	Z8 51387	2		
19	Z8 51356	2	SOUNDPROOF + MESH 54015	[1]
20	Z8 51292	1		[1]
21	Z8 51437	2		[1]
22	Z8 40051	1	FLANGE CEP HP1/1.5	[2]
23	Z8 51376	2		
24	ZBVTBC0630ZB	6		[3]
25	ZBVTE0825ZB	1		[4]
26	Z8 51643	1		
27	ZBDN06ZB	6		[5]
28	ZBDN04ZB	2		[6]
29	ZBVTBC0412ZB	2		[7]
32	ZBVTCCE0820ZB	4		[8]

Part Notes:

[1] - ORDER COMPLETE BLOWER
[2] - GUARANTEE DATE EXPIRED
[3] - ZBVTBC0630ZB
[4] - ZBVTE0825ZB
[5] - ZBDN06ZB
[6] - ZBDN04ZB
[7] - ZBVTBC0412ZB
[8] - ZBVTCCE0820ZB

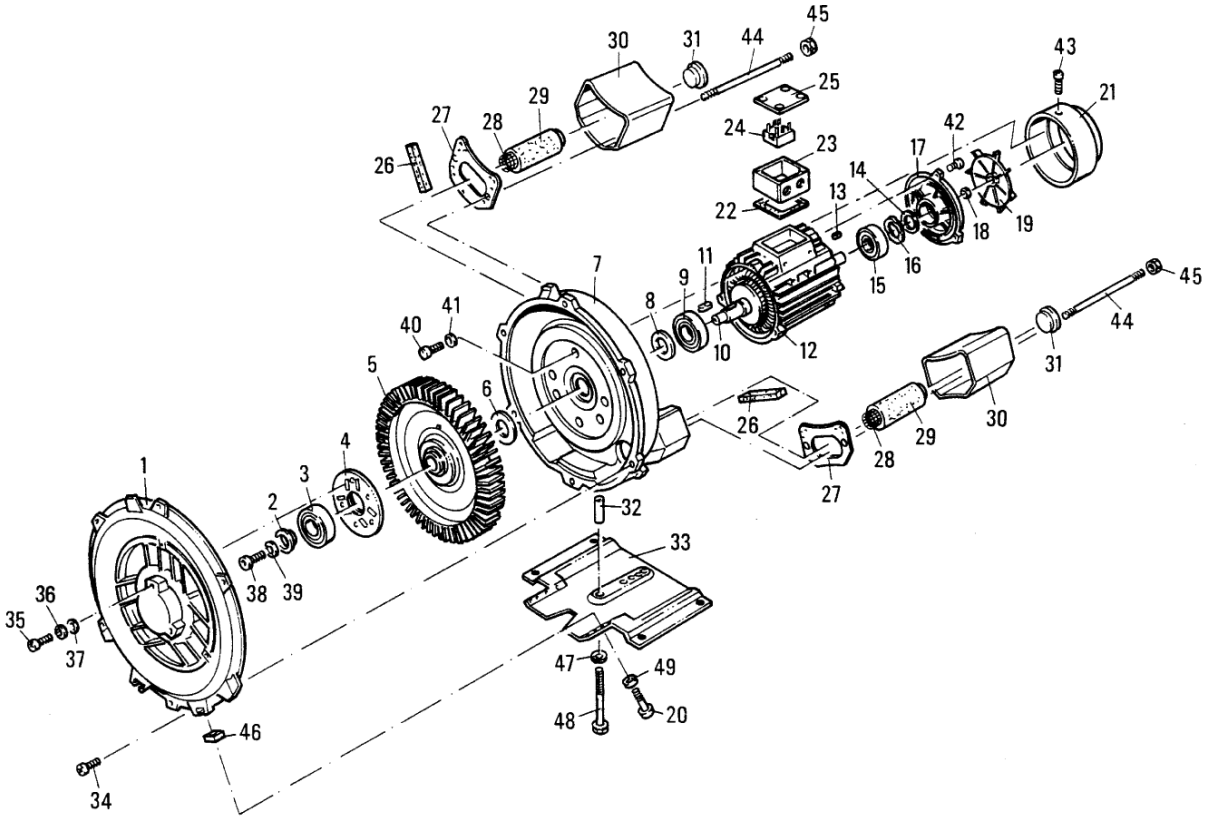
45
30
31
44
43
25
21
29
27
28
24
42
23
17
26
14
13
22
18
19
11
16
7
9
15
45
8
41
44
40
10
12
31
5
6
26
30
29
4
28
1
3
27
2
32
33
38
39
36
35
37
47
49
48
20
46
34

Pos.	Artikel-Nr.	Menge	Variante	Notes
01	Z8 51013	1	BOTTOM CAP 55030/55055	[1]
03	Z8 51504	1	BEARING 55030	[1]
05	Z8 51046	1	IMPELLER MOD.55030/55055	[1]
07	Z8 51079	1	IMPELLER MODEL 55030	[1]
08	Z8 51725	1		[1]
09	Z8 51590	1		[1]
12	Z8 51144	1		[1]
14	Z8 51739	1		
16	Z8 51750	1		
17	Z8 51170	1	UPPER CAP FOR 55020	
19	Z8 51331	1	COOLING FAN 55020/55030	[2]
21	Z8 51204	1	COVER MOTOR COOLING FAN 3307/6	[3]
22	Z8 51280	1		
23	Z8 51232	1		
24	Z8 51264	1	TERMINAL MOD.55020/55030	[4]
25	Z8 51249	1		[4]
26	Z8 51760	2		
27	Z8 51425	2	SEAL MUFFLER 55020	[5]
28	Z8 51394	2		
29	Z8 51362	2	Schalldämmung + Mesh55020-30-55	[6]
30	Z8 51298	2	MUFFLER MOD.55020-55030-5	
31	Z8 51380	2		
37	Z8 51541	4	RING MOD.55055-55055W	[1]
50	Z8 51815	1		
51	Z8 51847	1	MOTOR MOD. 55030 COMPLETE	[1]

Part Notes:

[1] - ORDER COMPLETE BLOWER
[2] - CONTACT PM IN ZOCCA
[3] - CONTACT PROD MANAGEMENT
[4] - NO MORE AVAILABLE
[5] - GUARANTEE PERIOD EXPIRED
[6] - ARTICLE NO MORE SUPPLIED

© 2023 - Nilfisk A/S