PARTS LIST

SW3000

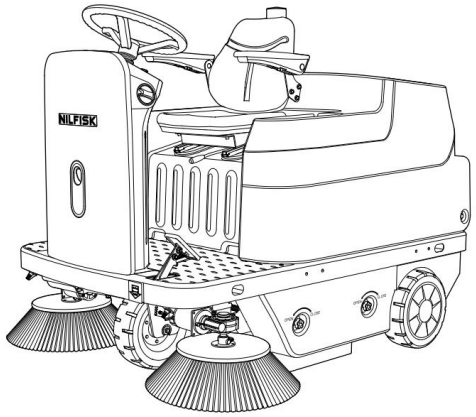

Model No.:

50000740/50000741/50000742/50000743/50000758

NILFISK

2026.11.16

NILFISK

TABLE OF CONTENTS

GENERAL VIEW 1
DIRECTION CONTROL ASSEMBLY 3
FRONT MAIN FRAME ASSEMBLY 5
CONTROL HOUSING ASSEMBLY 7
CONTROL HOUSING ASSEMBLY (CONTINUE) 9
FRONT WHEEL ASSEMBLY 11
SPRAY WATER ASSEMBLY 13
OVERHEAD GUARD ASSEMBLY 15
COVER ASSEMBLY 17
VACUUM MOTOR LID ASSEMBLY 19
FILTER SHAKER ASSEMBLY 21
HOPPER ASSEMBLY 23
CHASSIS ASSEMBLY 25
REAR WHEEL ASSEMBLY 28
POWER SUPPLY AND CONTROL ASSEMBLY 30
DRIVE ASSEMBLY 33
BRAKE ASSEMBLY 35
SIDE BROOM ASSEMBLY 37
MAIN BROOM ASSEMBLY 39
MAIN BROOM ASSEMBLY (CONTINUE) AND ACTUATOR ASSEMBLY 41
MAIN BROOM SIDE DOOR ASSEMBLY 43
FRONT FLAP ASSEMBLY 45
COMMON HARNESS 47
COMMON HARNESS 2 49
MAINTENANCE 51
tc1_SW3000 54

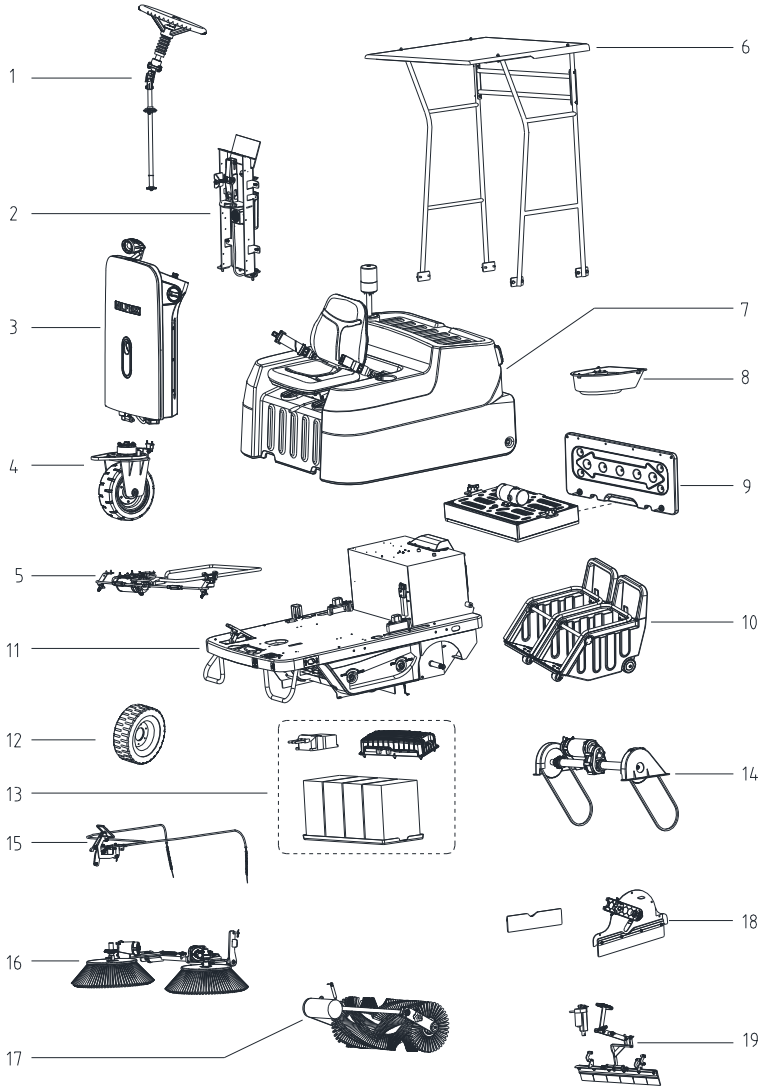
1
2
3
4
5
6
7
8
9
10
11
12
13
14
15
16
17
18
19

Pos.	Artikel-Nr.	Menge	Variante	Notes
1		1	DIRECTION CONTROL ASSEMBLY	
2		1	FRONT MAIN FRAME ASSEMBLY	
3		1	CONTROL HOUSING ASSEMBLY	
4		1	FRONT WHEEL ASSEMBLY	
5		1	SPRAY WATER ASSEMBLY	
6		1	OVERHEAD GUARD ASSEMBLY	
7		1	COVER ASSEMBLY	
8		1	VACUUM MOTOR LID ASSEMBLY	
9		1	FILTER SHAKER ASSEMBLY	
10		2	HOPPER ASSEMBLY	
11		1	CHASSIS ASSEMBLY	
12		1	REAR WHEEL ASSEMBLY	
13		1	POWER SUPPLY AND CONTROL ASSEMBLY	
14		1	DRIVE ASSEMBLY	
15		1	BRAKE ASSEMBLY	
16		1	SIDE BROOM ASSEMBLY	
17		1	MAIN BROOM ASSEMBLY	
18		1	MAIN BROOM SIDE DOOR ASSEMBLY	
19		1	FRONT FLAP ASSEMBLY	

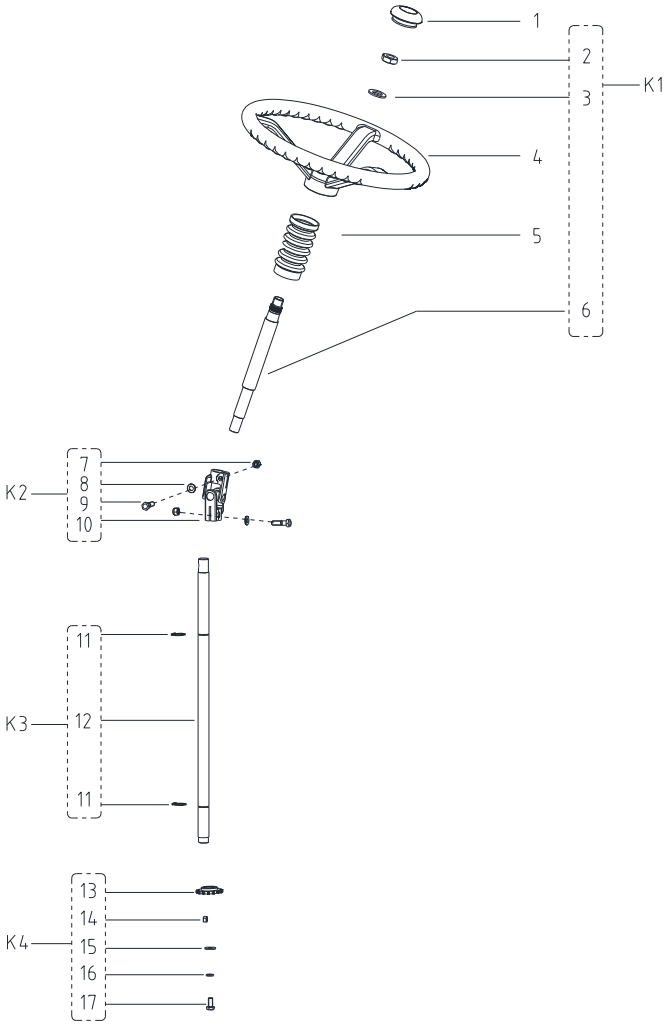
1
2
3
K1
4
5
6
K2
7
8
9
10
K3
11
12
11
K4
13
14
15
16
17

Pos.	Artikel-Nr.	Menge	Variante	Notes
1	55945964	1	STEERING WHEEL COVER	
2		1	M18 THIN NUT	
3		1	WASHER D18XD23X2.5	
4	55945965	1	STEERING WHEEL	
5	55945939	1	PROTECTIVE SLEEVE	
6		1	UPPER STEERING SHAFT	
7	VF14516	2	NUT LOCK M8	
8	VF13514A	2	Beilagscheibe M8xM16.5x1	
9	VF14251	2	SCREW M8X30HEX SCREW M8X30	
10		1	UNIVERSAL JOINT	
11	VR11308	2	RETAINING RING	
12		1	LOWER SHAFT STEERING WHEEL	
13		1	SPROCKET T15	
14		1	KEY SQUARE	
15	VF13542	1	WASHER PLAIN M8X26X2	
16	VF13519	1	WASHER SPRING ID8	
17	VV13604	1	SCREW M8X20HEX SCREW M8X20	
K1	55945940	1	UPPER SHAFT STEERING WHEEL KIT	
K2	VR41431	1	UNIVERSAL JOINT KIT	
K3	55940883	1	SHAFT STEERING WHEEL KIT LOWERSHAFT WHEEL KIT LOWER	
K4	VR41432	1	SPROCKET KIT	

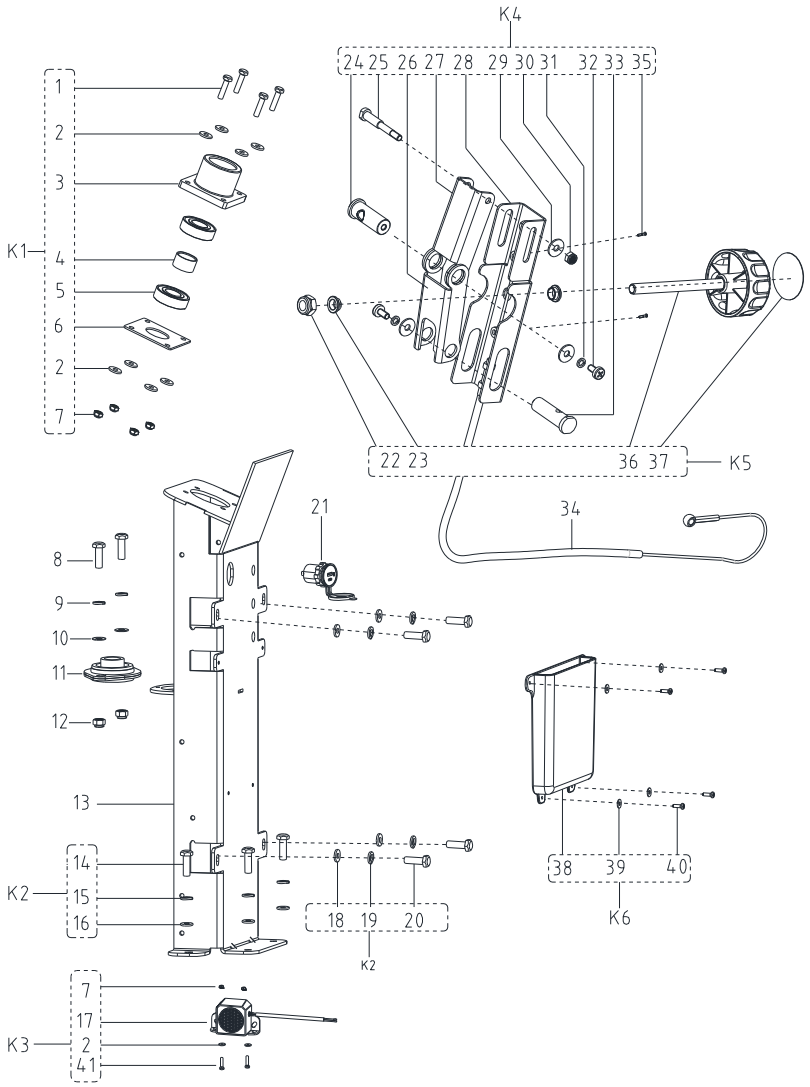
K4
24 25 26 27 28 29 30 31 32 33 35
K1
1
2
3
4
5
6
2
7
22 23
36 37
K5
34
21
8
9
10
11
12
13
14
15
16
K2
18 19 20
K2
38 39 40
K6
7
17
2
41
K3

Pos.	Artikel-Nr.	Menge	Variante	Notes
1	VV20058	4	HHC SCREW M6x25HEX SCREW M6X25	
2	VF13533	10	BEILAGSCHEIBE M6X16X2	
3	VR12002	1	BRACKET FIXED BEARING	
4	VR12008	1	SPACER BUSHING	
5	VF14075	2	BEARING 6004 2RS	
6	VR12003	1	PLATE FIXED BEARING	
7	VF14506	6	NUT LOCK SS M6	
8	VA13491	2	Schraube M8x25HEX SCREW M8X25	
9	VF13519	2	WASHER SPRING ID8	
10	VF13514A	2	Beilagscheibe M8xM16.5x1	
11	VR11006	1	BRARINGBEARING	
12	VF14516	2	NUT LOCK M8	
13	55945963	1	FRONT MAIN FRAME	
14		4	HEX SCREW M8X25 BLACK	
15		4	WASHER SPRING D8 BLACK	
16		4	WASHER PLAIN D8.1XD2SS0X2	
17		1	BUZZER	
18		4	WASHER PLAIN D6.1XD16X2	
19		4	WASHER SPRING D6	
20		4	HEX SOCKET SCREW M6X20	
21	55945943	1	USB WITH WATERPROOF COVER	
22	VF14547	1	NUT LOCK M10	
23		2	COPPER BUSH	
24		1	MIDDLE SHAFT	
25		1	UPPER SHAFT	
26		1	LOWER ROD	
27		1	UPPER ROD	
28		1	MAIN BROOM ADJUST BARACKET	
29	VF14543	3	WASHER DIA.6XDIA.18X1.5WASHER PLAIN 6X18X1.5	
30	VF14506	1	NUT LOCK SS M6NUT LOCK M6	
31	VV13607	2	Sicherungsscheibe M6WASHER SPRING	
32		2	SCREW M6X12	
33		1	LOWER SHAFT	
34	55945945	1	MAIN BROOM ADJUSTMENT CABLE	
35		2	HEX SOCKET COUNTERHUNK SCREW M6X16	
36		1	MAIN BROOM ADJUST KNOB	
37		1	MAIN BROOM ADJUST LABEL	
38		1	PHONE BAG	
39		4	WASHER PLAIN D4	
40		4	PH SCREW M4X8	
41	VF13495	2	Schraube M6x16	
K1	VR24071	1	KIT BEARING BASEBEARING BASE KIT	
K2	55945941	1	HARDWARE KIT	
K3	55945942	1	BUZZER KIT	
K4	55945944	1	MAIN BROOM ADJUSTMENT BRACKET KIT	
K5	55945962	1	MAIN BROOM ADJUSTMENT KNOB KIT	
K6	55945946	1	PHONE STORAGE KIT	

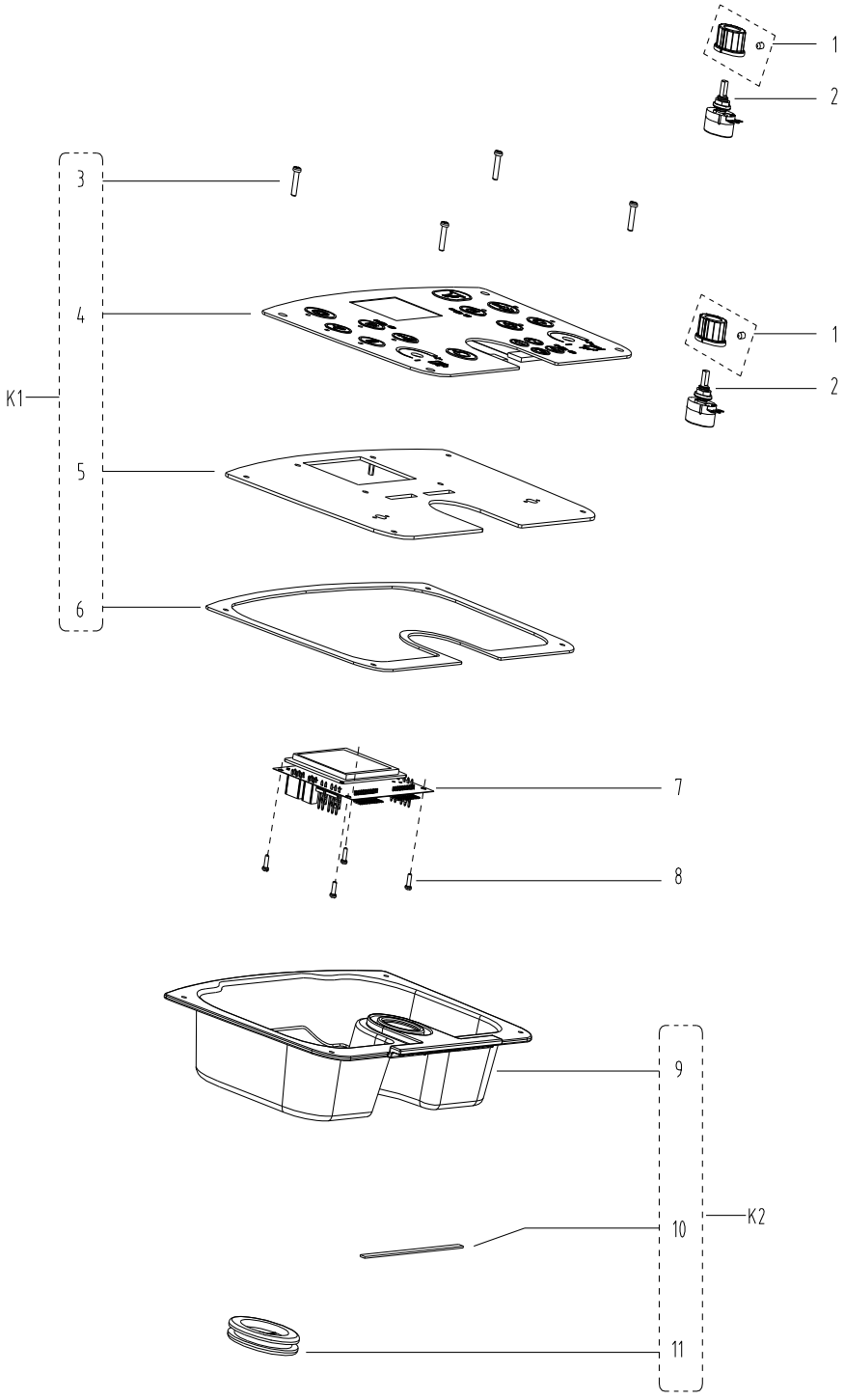
1
2
3
4
1
2
K1
5
6
7
8
9
10
K2
11

Pos.	Artikel-Nr.	Menge	Variante	Notes
1	55945947	2	POTENTIOMETER KNOB BLUE	
2	55945824	2	POTENTIOMETER	
3		4	PHI SCREW M4X16 BLACK	
4		1	MEMBRANE	
5		1	MOUNTING PLATE	
6		1	GASKET ADHESIVE EVA	
7	55945956	1	UI CONTROLLER PCB	
8	VV13651	4	SCREW M3X8PHI SCREW M3X8	
9		1	DUST-PROOF BOX	
10		1	GASKET	
11		1	CABLE SLEEVE	
K1	55945948	1	CONTROL PANEL KIT	
K2	55945950	1	DUST PROOF BOX KITDUST-PROOF BOX KIT	

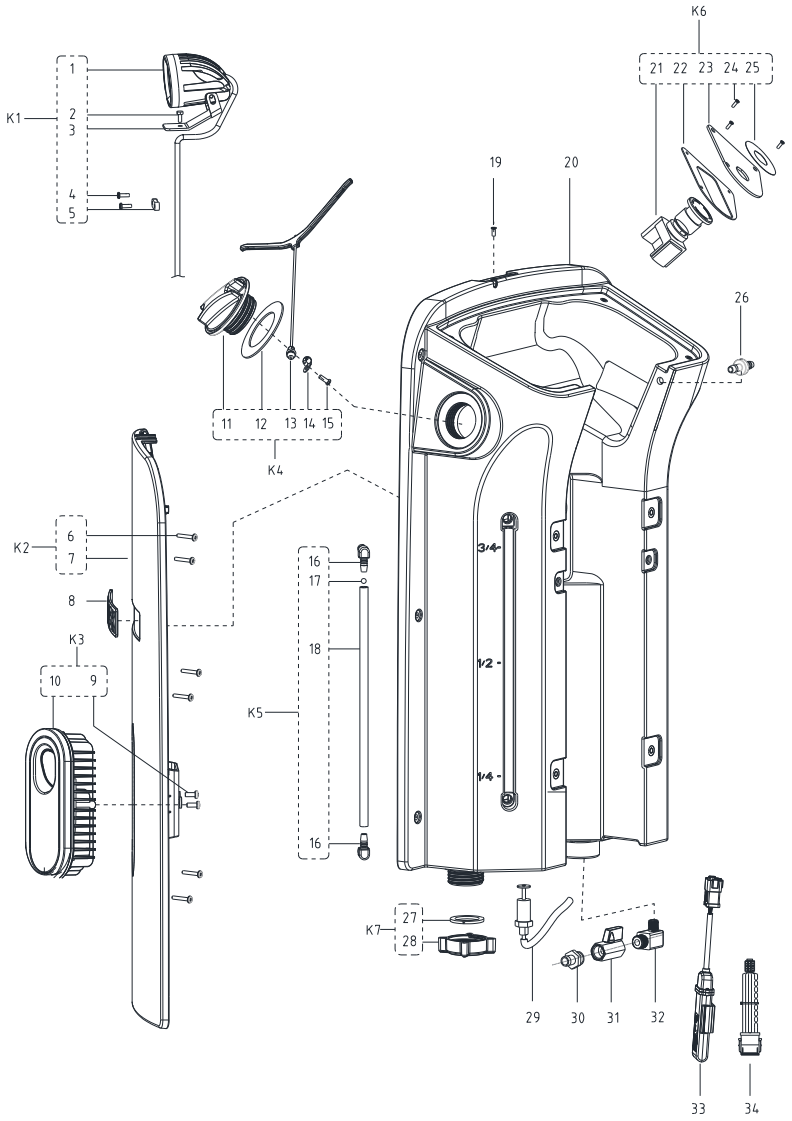
K6
21 22 23 24 25
K1
1
2
3
4
5
19
20
26
11 12 13 14 15
K4
K2
6
7
8
K3
10 9
16
17
18
K5
16
3/4"
1/2"
1/4"
K7
27
28
29
30
31
32
33
34

Pos.	Artikel-Nr.	Menge	Variante	Notes
1		1	BLUE LIGHT	
2		1	HEX SCREW M4X10 BLACK	
3		1	BLUE LIGHT BRACKET	
4		2	PHI SCREW	
5		1	ANTI-STRAIN CLIP	
6		6	TORX SCREW M4X25	
7		1	FRONT COVER	
8	55945966	1	DECAL KIT	[1]
9		2	PHI SCREW SELF M5X12	
10		1	FRONT LIGHT KIT	
11		1	TANK COVER	
12		1	SEAL GASKET	
13		1	TETHER ASSEMBLY	
14		1	TERMINAL	
15		1	PHI SELF SCREW M3.5X8	
16	RD60764	2	ELBOW 90DEG PLASTIC90° ELBOW	
17	VF90613	1	FLOATING BALL OF WATER LEVEL	
18		1	SIGHT TUBE PU L300MM	
19		1	PHI COUNTERSUNK SCREW M4*10 BLACK	
20	55945967	1	SOLUTION TANK	
21		1	EMERGENCY STOP	
22		1	SEALING GASKET FOR E-STOP	
23		1	MOUNTING PLATE FOR E-STOP	
24		3	SCREW BLACK M3X10	
25		1	WARING LABEL FOR E-STOP	
26	55940358	1	VALVE ONE-WAY	
27	VF90513	1	O-RING OUTLET	
28	VF90507	1	OUTLET COVER	
29	VR13430	1	SWITCH SOLUTION TANK WATER LEVELFLOAT SWITCH KIT	
30	VF80313	1	CONNECTOR BRASS	
31	VF80361	1	BALL VALVE	
32	VF90609	1	ELBOW 90DEG BRASS	
*33	9100003246	1	TC-1 MODULE SIPTC1 MODULE	[2]
*34	559505775	1	CONNECTIVITY KIT TC1 SW3000	
*K1	55945951	1	BLUE LIGHT WARNING KIT	
K2	55945952	1	FORNT COVER KIT	
K3	55945953	1	FRONT LIGHT KIT	
K4	55945954	1	COVER INLET KIT	
K5	55940865	1	SIGHT TUBE KITWATER LEVEL PIPE KIT	
K6	55945955	1	EMERGENCY STOP KIT	
K7	VF90536	1	ABDECKUNGSSET WASSERABLAUFCOVER OUTLET KIT	

Part Notes:

[1] - Item K10 include FILTER SHAKER ASSEMBLY CHASSIS ASSEMBLY CONTROL HOUSING ASSEMBLY (CONTINUE) decals Includes FILTER SHAKER ASSEMBLY CHASSIS ASSEMBLY CONTROL HOUSING AS- SEMBLY (CONTINUE) decals.

[2] - INSTRUCTIONS INSTALL FOR KIT 55945049 B

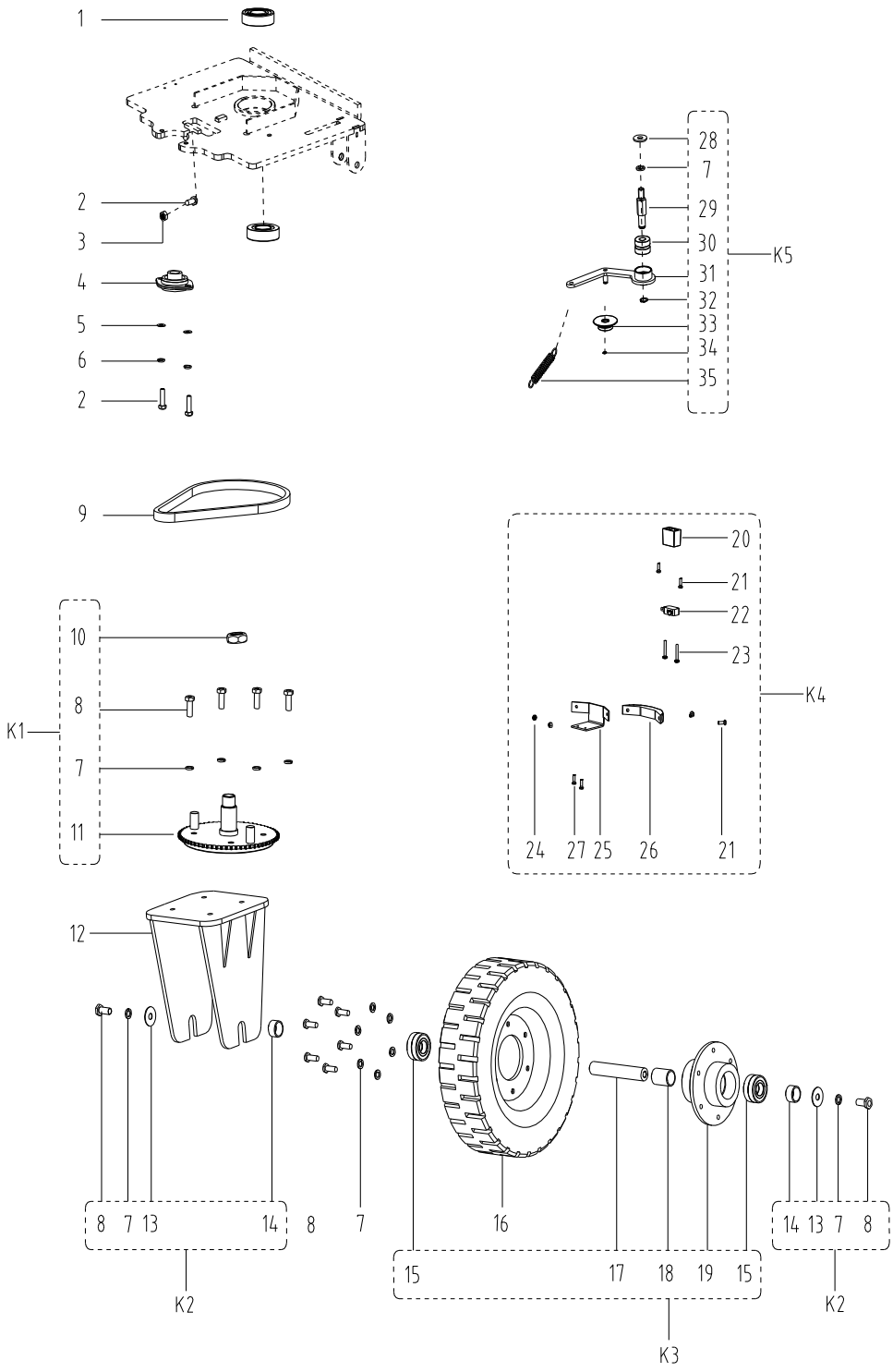
1
2
3
4
5
6
2
9
10
8
7
11
K1
12
8 7 13 14
K2
8 7
15 17 18 19 15
K3
16
14 13 7 8
K2
28
7
29
30
31
32
33
34
35
K5
20
21
22
23
24 27 25 26 21
K4

Pos.	Artikel-Nr.	Menge	Variante	Notes
1	55940359	2	BEARING BALL-7206 2RSBEARING 7206 2RS	
2	VA13491	3	Schraube M8x25HEX SCREW M8X25	
3	VF13513	1	NUT M8 SS	
4	VR11006	1	BRARINGBEARING	
5	VF13514A	2	Beilagscheibe M8xM16.5x1WASHER ID8XOD16.5X1MM	
6	VF13519	2	WASHER SPRING ID8WASHER SPRING D8	
7		13	WASHER LOCK F10	
8		12	HEX SCREW M10X25	
9	55940361	1	CHAIN ROLLER 06B	
10		1	NUT M24	
11		1	SPROCKET T13 45# GALV	
12	55940362	1	BRACKET FRONT WHEELFRONT WHEEL BRACKET	
13		2	WASHER PLAIN 10X30X2.5mm	
14		2	SLEEVE FRONT WHEEL SS	
15	ZD45425	4	BEARING 6204 LUBEARING 6204LU	
16	55940340	1	WHEEL	
17		1	SHAFT FRONT WHEEL D.20XL.139MM	
18		1	RING F SHAFT D.20	
19		1	BEARING SLEEVE	
20		1	BLOCK SWITCH	
21	VF13491	4	Schraube M4x12	
22		1	MICRO-SWITCH	
23	VV13623	2	SCREW ST3X18	
24		2	NUT LOCK M4	
25		1	BRACKET SENSOR SWITCH FIXING	
26		1	TOUCH BLOCK	
27	VF90235	2	SCREW TM4X10	
28	VF13537	1	Beilagscheibe M10xM26x2WASHER PLAIN10.3*25*2	
29		1	FIXING SHAFT	
30		2	BEARING 6001-Z	
31		1	TENSION WHEEL BRACKET	
32		1	RETAINER RING	
33		1	TENSION WHEEL	
34		1	RETAINER RING	
35		1	TENSION SPRING	
K1	55945931	1	DRIVE FRONT WHEEL KITDRIVE FLANGE KIT	
K2	55940859	2	FRONT WHEEL HARDWARE KIT	
K3	55945938	1	FRONT WHEEL BEARING KIT	
K4	55945878	1	SPEED REDUCTION KIT	
K5	55945949	1	FRONT SPROCKET TENSION WHEEL KIT	

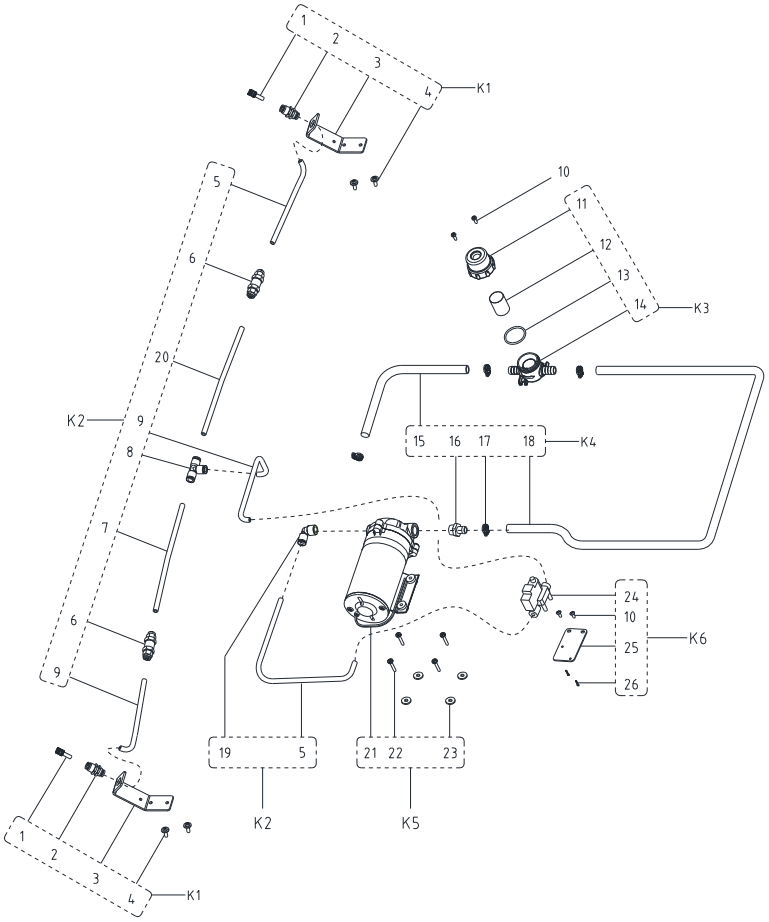
1
2
3
4
K1
5
6
20
K2
9
8
7
6
9
1
2
3
4
K1
10
11
12
13
14
K3
15
16
17
18
K4
24
10
25
26
K6
19
5
K2
21
22
23
K5

Pos.	Artikel-Nr.	Menge	Variante	Notes
1	55945958	2	SPRAY NOZZLESPRAY NOZZLE	
2		2	NOZZLE SNAP JOINT	
3		2	BRACKET NOZZLE	
4		4	SCREW M5X14	
5		2	HOSE L.370	
6	55940363	2	VALVE ONE-WAY	
7		1	HOSE L.150	
8		1	FAST CONNECTOR T-JUNCTION	
9		2	HOSE L.260	
10	VF90235	4	SCREW TM4X10	
11	55945881	1	FILTER COVER	
12	55940364	1	FILTER NET 80 MESH SS	
13	VF90607	1	O-RING	
14	VF90604	1	HOUSING FILTER	
15		1	HOSE PU L.500	
16	VF80313	1	CONNECTOR BRASS	
17	VV10114	4	Klammer	
18		1	HOSE PU L.1150	
19		1	FAST CONNECTOR	
20		1	HOSE L.300	
21		1	PUMP	
22	VV13635	4	SCREW M5X20 SST PHSCREW M5X20	
23	VF13532	4	Beilagscheibe M5	
24		1	SWITCH PUMP HIGH-PRESSURE	
25		1	FIXING PLATE F PUMP HIGH-PRESSURE SWITCH	
26		2	SCREW M3X11	
K1	55940891	2	SPRAY NOZZLE KIT	
K2	55940892	1	SPRAY HOSE KIT	
K3	55945889	1	FILTER KIT 82X46X62 PA	
K4	55940893	1	FILTER HOSE KIT	
K5	55940894	1	PUMP KIT	
K6	55940856	1	SWITCH PUMP HIGH-PRESSURE KIT	

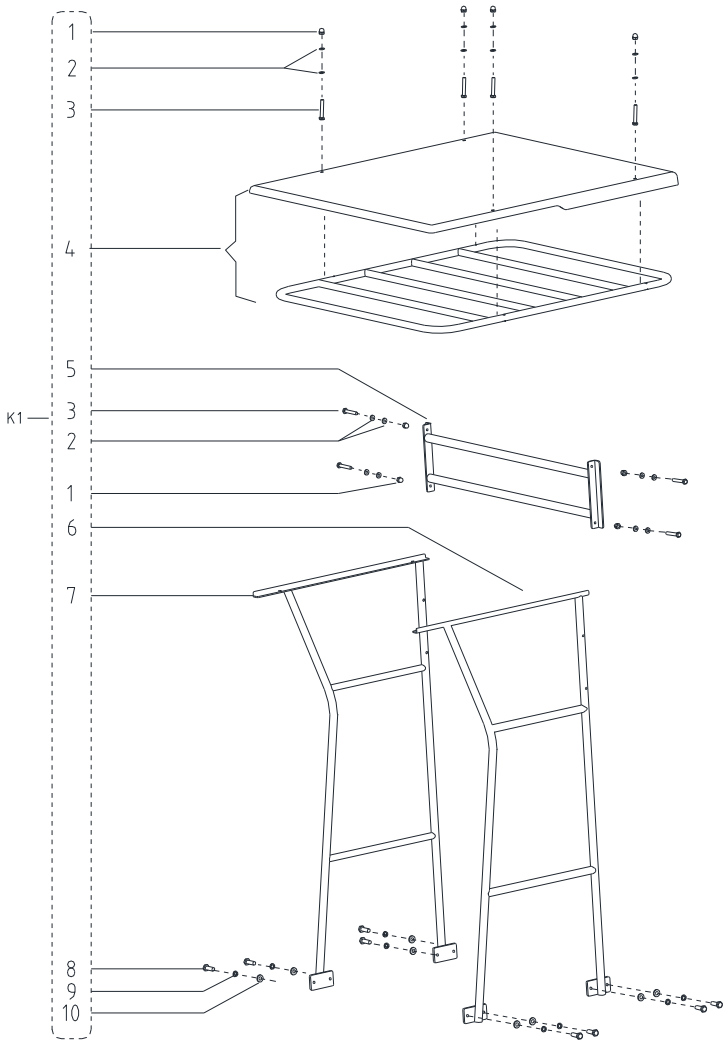
1
2
3
4
5
K1
3
2
1
6
7
8
9
10

Pos.	Artikel-Nr.	Menge	Variante	Notes
1	VF14516	8	NUT LOCK M8	
2		16	WASHER 8.1X20X2	
3	VF13635	8	SCREW M8 x 50SCREW M8X50	
4		1	OVERHEAD GUARD	
5		1	FIXED BRACKET	
6		1	LEFT BRACKET	
7		1	RIGHT BRACKET	
8	VF13634	8	BOLT M10x30	
9	VF13518	8	WASHER LOCK F10WASHER LOCK 10	
10	VF13517	8	WASHER PLAIN F10XF20X2.5WASHER 10XF20X2.5	
*K1	55940412	1	OVERHEAD GUARD KITOVERHEAD GUARD KIT	

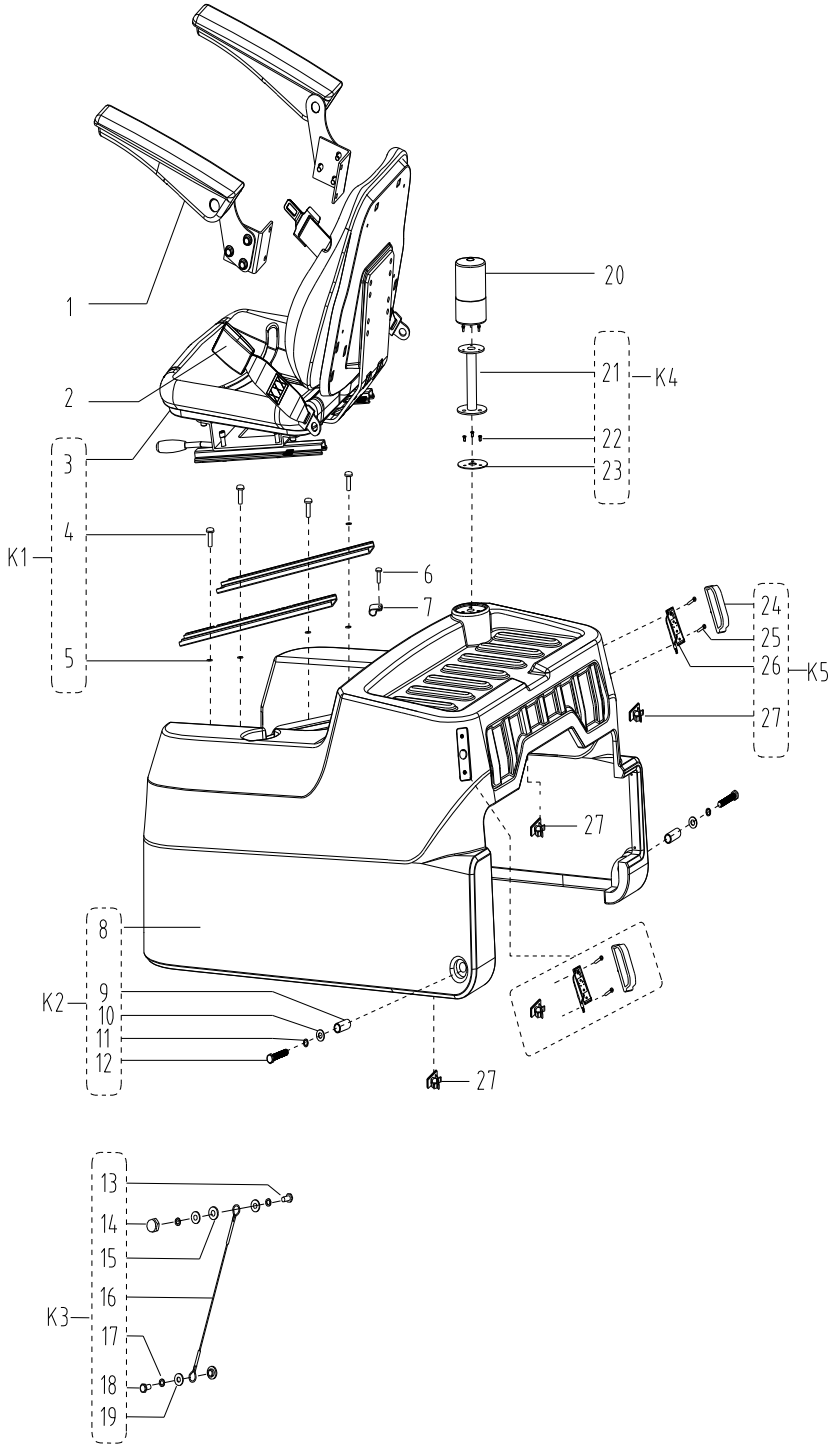
1
2
3
K1
4
5
6
7
20
21
K4
22
23
24
25
26
K5
27
27
27
8
K2
9
10
11
12
13
14
15
K3
16
17
18
19

Pos.	Artikel-Nr.	Menge	Variante	Notes
*1	55945837	1	SEAT ARMREST ASSEMBLY SET	
*2	55945830	1	SEAT BELT SET	
3		1	SEAT ASSEMBLY	
4		4	HEX SCOKET SCREW	
5	VF13535	4	BEILAGSCHEIBE M8X26X2WASHER 8.1X20X2	
6	VV20509	1	Schraube M5x10SCREW M5X10	
7	VF85102	1	SMALL CLAMPBIG CLAMP	
8		1	SEAT COVER	
9		2	BUSH ID16XOD20XL43	
10		2	WASHER PLAIN BLACK 12X24X2	
11		2	WASHER LOCK Ø12 BLACK	
12		2	OUTER HEX SCREW M12*80	
13		1	OUTER HEX SCREW M6*30	
14		1	NUT M6 SUS304 BLACK	
15		2	SPACER D.6.2X10 H.7.7	
16	VR17008	1	RECOVERY TANK PULL CABLECABLE RECOVERY TANK	
17		3	WASHER LOCK M6	
18	VF14233	1	Schraube M6x20SCREW M6X20	
19		3	WASHER D6X18X1.5	
20	55945984	1	WARNING LIGHT	
21		1	WARNING LIGHT BRACKET	
22		3	SCREW SUS304 BLACK	
23		1	BRACKET GASKET	
24		2	TAILLIGHT	
25	VV13635	4	SCREW M5X20 SST PH	
26		2	LAMP HOLDER ASSEMBLY	
27		4	CALBE CLAMP	
K1	55945839	1	SEAT KIT	
K2	55945840	1	COVER KIT	
K3	55945841	1	CABLE KIT	
K4	55945874	1	WARNING LIGHT BRACKET KIT	
K5	55945875	2	TAILLIGHT KIT	

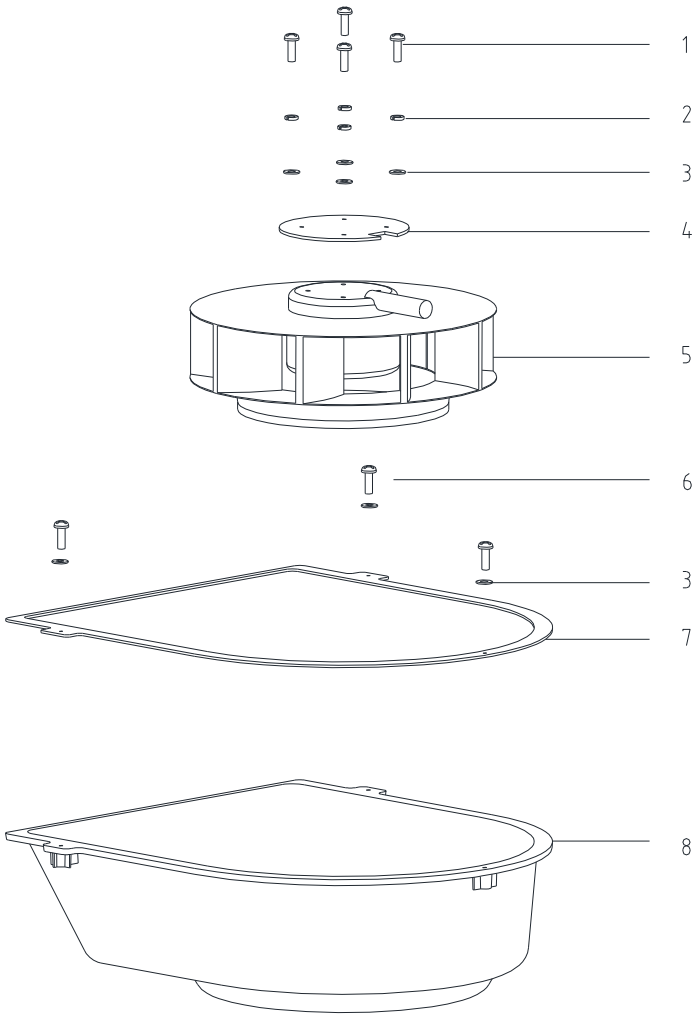
1
2
3
4
5
6
3
7
8

Pos.	Artikel-Nr.	Menge	Variante	Notes
1	VF13491	4	Schraube M4x12	
2	VV13601	4	WASHER SPRING ID5	
3	VA13483A	7	WASHER PLAIN	
4	55940550	1	GASKET VACUUM MOTOR	
5	55945879	1	VACUUM MOTOR KIT	
6	VA13477	3	SCREW M4*15	
7	55940552	1	GASKET VACUUM MOTOR LID	
8	55940553	1	LID VACUUM MOTOR	

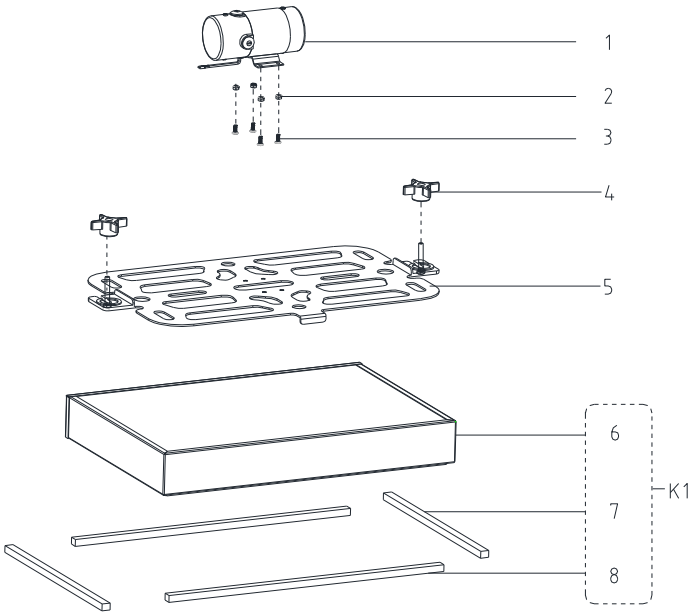
1
2
3
4
5
6
7
8
K1

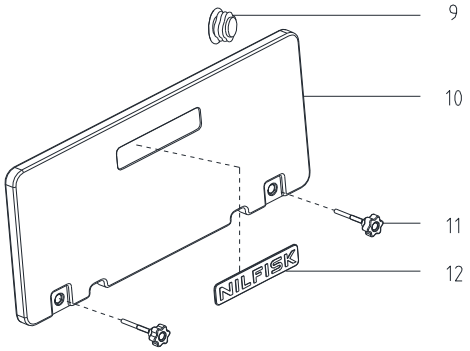
9
10
11
12
NILFISK

Pos.	Artikel-Nr.	Menge	Variante	Notes
1	55945985	1	VIBRATION MOTOR	
2	VF14506	4	NUT LOCK SS M6NUT LOCK M6	
3	VV13605	4	SCREW M6X16	
4	VF81210	2	FlügelmutterKNOB KNURLED M8X55 MALE	
5	55946106	1	BRACKET FILTER SHAKER	
6		1	FILTER 580X401X80	
7		2	GASKET L399	
8		2	GASKET L546.4	
9	VF85127	1	CAP FOR KNOBCAP BLACK TANK LOCKING	
10	55945986	1	FILTER SHAKER LID	
11	55945983	2	KNOB KNURLED M8X40 BLUE	
12	55945966	1	DECAL KIT	[1]
K1	55945906	1	FILTERSET KIT 580X401X80 PES 3,5M²FILTER KIT 580X401X80 PES 3.5m²	
*K1	55945835	1	FILTER KIT HEPA13 580X401X80 3.5H13 FILTER KIT 580X401X80 PES 3.5	

Part Notes:

[1] - Item K10 include FILTER SHAKER ASSEMBLY CHASSIS ASSEMBLY CONTROL HOUSING ASSEMBLY (CONTINUE) decals
Item 12 include FILTER SHAKER ASSEMBLY CHASSIS ASSEMBLY CONTROL HOUSING AS- SEMBLY (CONTINUE) decals.

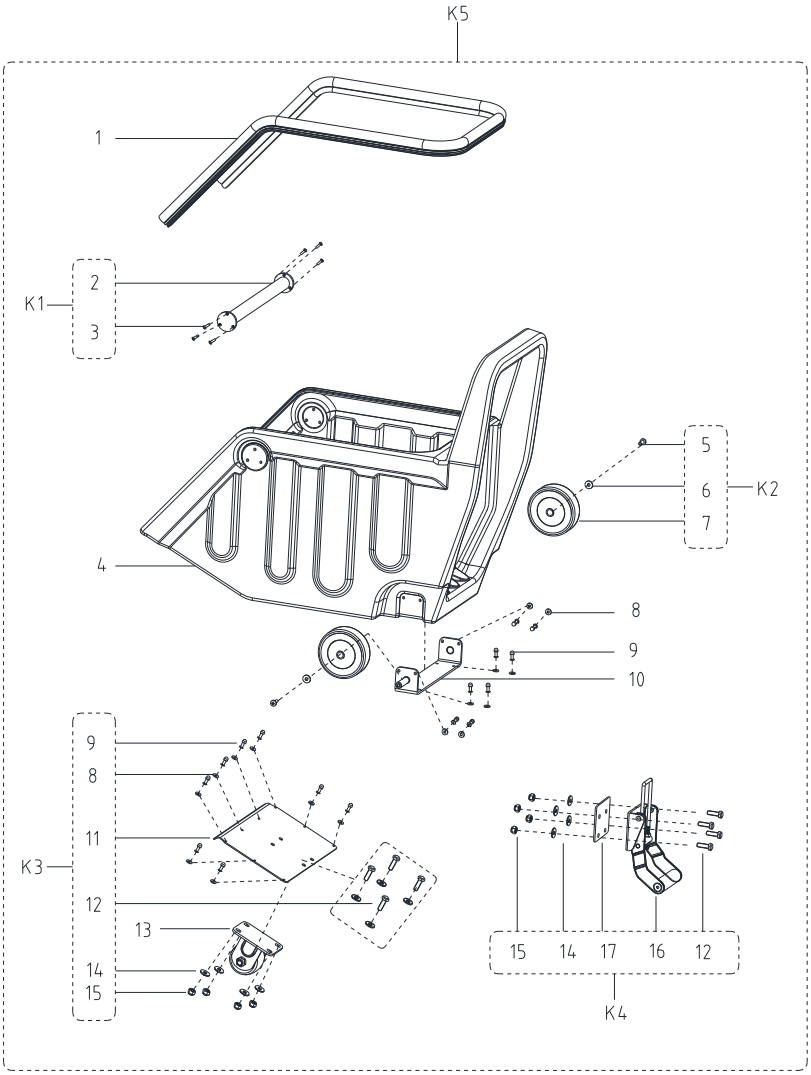
K5
1
K1
2
3
4
K2
5
6
7
8
9
10
K3
9
8
11
12
13
14
15
15
14
17
16
12
K4

Pos.	Artikel-Nr.	Menge	Variante	Notes
1	55945974	2	GASKET	
2		2	HANDLE E-PLATING BLACK	
3		12	SCREW M5X12 BLACK	
4	55945987	2	HOPPER	
5		4	M6X16 SUS304 BLACK	
6		4	WASHER D6.1XD16X2 BLACK	
7		4	REAR WHEEL 4INCH	
8		32	WASHER 5X12X1.5MM BLACK	
9	VA13461	32	AL RIVET 4 4/5x18ALUMINUM RIVET	
10	55945988	2	REAL WHEEL BRACKET	
11		2	HOPPER FRONT BACKPLATE	
12		16	HEX SCREW M8X25 SUS304 BLACK	
13	55945989	2	WHEEL 2.5INCH BLACK	
14		24	WASHER D8.1XD20X2 BLACK	
15		16	NUT LOCK M8 BLACK	
16		2	LATCH	
17		2	STIFFENING PLATE FOR LATCH	
K1	55945969	2	CONTAINER HANDLE KIT	
K2	55945970	4	4 INCH REAR WHEEL KIT	
K3	55945972	2	FRONT REINFORCING PLATE KIT	
K4	55945973	2	LATCH KIT	
K5	55945981	2	HOPPER KIT	

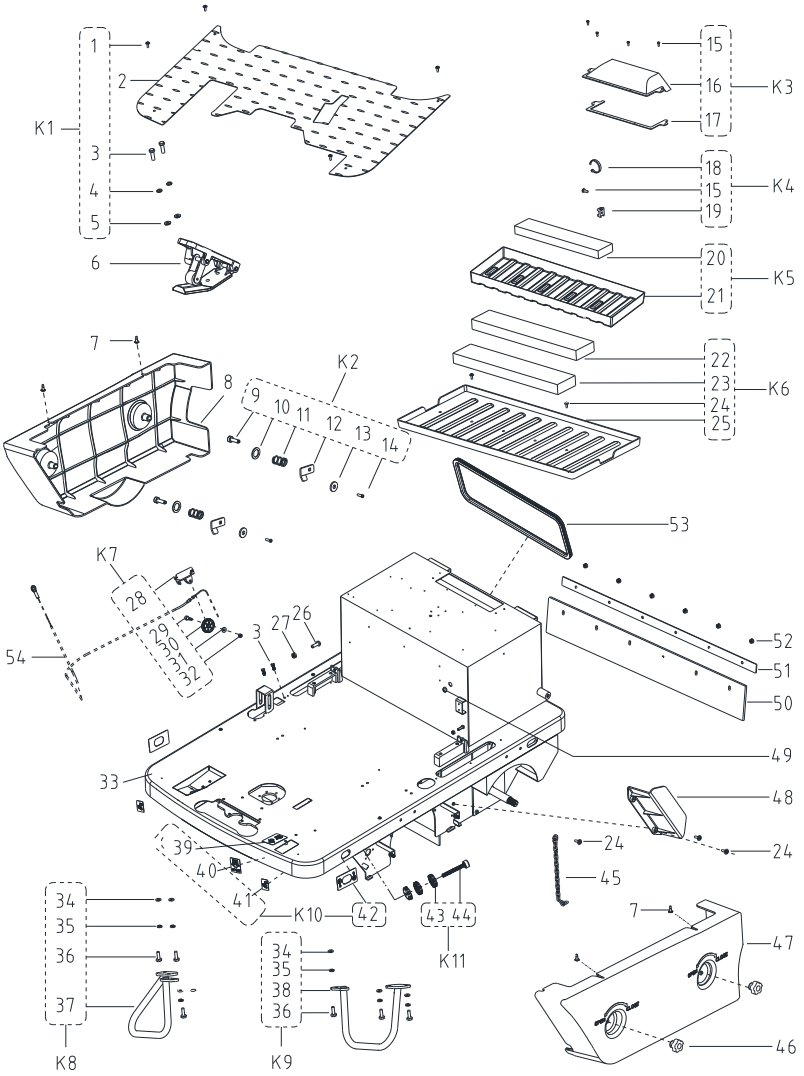
K1
1
2
3
4
5
6
7
8
K2
9
10
11
12
13
14
K3
15
16
17
K4
18
15
19
K5
20
21
K6
22
23
24
25
53
K7
28
29
30
31
32
54
3
27
26
52
51
50
49
33
48
24
24
45
39
40
41
K10
42
43 44
K11
34
35
36
37
K8
34
35
38
36
K9
7
47
46

Pos.	Artikel-Nr.	Menge	Variante	Notes
1		4	SCREW PW M5X14 BLACK	
2	55945975	1	FOOT PLATE ANTISKID	
3		2	SCREW M8X20	
4		2	WASHER SPRING M8	
5		2	WASHER PLAIN 8.5X15X1.6	
6	55945909	1	ACCELERATOR PEDAL KITACCELERATOR PEDAL	
7	VS10516	4	STEP SCREW	
8	55945826	1	RIGHT COVER	
9		2	ROTATING ROD	
10		2	WASHER PLAN M19	
11		2	SPRING COMPRESSION	
12		2	LIMIT PLATE	
13	VF13532	2	Beilagscheibe M5	
14	VF90235	2	SCREW TM4X10	
15		18	SCREW M5X12	
16		1	BRACKET AIR OUTLET BLACK	
17		1	BRACKET AIR OUT GASKET	
18		14	TIE	
19	VF85428	14	HOLDER FLAT TIE	
20		1	SPACER PLATE BATTERY 700X55X30	
21		1	TRAY LEAD-ACID BATTERY 740X280X55	
22A		2	SPACER PLATE BATTERY 337X140X30	
22B		1	SPACER PLATE BATTERY 760X78X30	
23A		1	SPACER PLATE BATTERY 490X70X30	
23B		1	SPACER PLATE BATTERY 760X95X30	
24		5	SCREW PW M5X14	
25		1	TRAY BATTERY 765X335X30	
26	VA13491	2	Schraube M8x25SCREW M8X25	
27	VF13513	2	NUT M8 SS	
28		1	PULLEY BRACKET	
29	VF80355A	1	SHOULDER BOLT M10X16SCREW 10X16XM8	
30		1	DIRECTIONAL WHEEL	
31	VF13535	1	BEILAGSCHEIBE M8X26X2WASHER D8	
32	VF14516	1	NUT LOCK M8	
33	55945827	1	CHASSIS	
34	VF13537	6	Beilagscheibe M10xM26x2WASHER D10X D26*2	
35	VF13518	6	WASHER LOCK F10WASHER SPRING D10	
36	VF14007	6	SCREW M10x32 HEXHEX SCREW M10X32	
37		1	BUMPER RIGHT	
38		1	BUMPER LEFT	
39		1	BRAKE LABEL	
40		1	FILTER LABEL	
41		2	NOZZLE LABEL	
42		2	TIE DOWN POINT LABEL	
43		3	KNOB M10	
44		1	SCREW LIMITING M10X80	
45	55940332	1	STATIC CHAIN	
46	55945976	2	KNOB BRIGHT BLUE	
47	55945980	1	LEFT COVER	
48	55940331	1	GUARD BOARD CHAIN	
49	55940335	1	SHEATH WIRE HOLE	
50	55940330	1	BLADE MAIN BROOM REAR NBRREAR BLADE MAIN BROOM NBR	
51	55940366	1	STRAP MAIN BROOM REAR	
52	VF14506	6	NUT LOCK SS M6NUT LOCK M6	
53	55945968	1	GASKET	
54	55945945	1	MAIN BROOM ADJUSTMENT CABLE	
K1	55945880	1	SCREW KIT	
K2	55945977	1	LIMIT PLATE KIT	
K3	55945978	1	AIR OUTLET BRACKET KIT	

Pos.	Artikel-Nr.	Menge	Variante	Notes
K4	55940304	12	TIE CABLE KIT	
*K5B	55940320	1	KORB BLEIAKKUEXTRA BATTERY TRAY FOR WET	[1]
K6A	55945832	1	BATTERY TRAY KIT F LI IONBATTERY TRAY KIT F LI-ION	[2]
K6B	55940319	1	BATTERY TRAY KITBATTERY TRAY KIT F LEAD-ACID	[2]
K7	55945979	1	DIRECTIONAL WHEEL KIT	
K8	55945890	1	BUMPER RIGHT KIT	
K9	55945960	1	BUMPER LEFT KIT	
K10	55945966	1	DECAL KIT	[3]
K11	55940937	1	SCREW LIMITING KITSIDE BROOM ADJUSTMENT SCREW KIT	

Part Notes:

[1] - *K5B cannot be used individually. It should be with K6B.

A for Li-ion, B for Lead-acid

* Means optional

[2] - A for Li-ion, B for Lead-acid

[3] - Item K10 include FILTER SHAKER ASSEMBLY CHASSIS ASSEMBLY CONTROL HOUSING ASSEMBLY (CONTINUE) decals

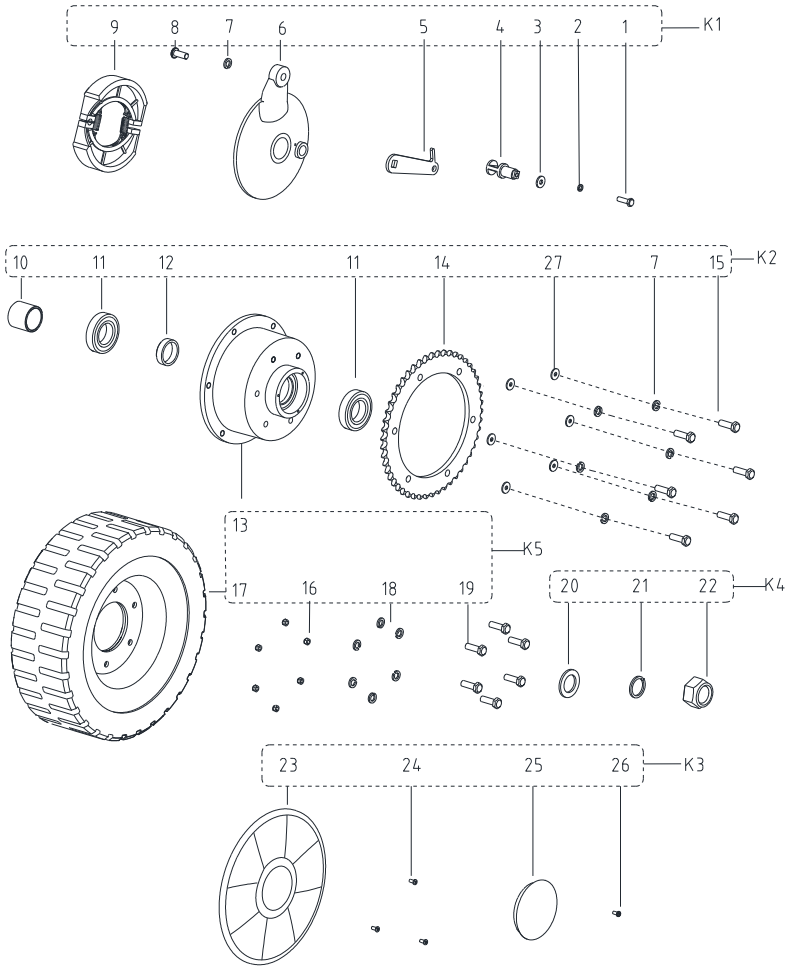
9
8
7
6
5
4
3
2
1
K1
10
11
12
11
14
27
7
15
K2
13
K5
17
16
18
19
20
21
22
K4
23
24
25
26
K3

Pos.	Artikel-Nr.	Menge	Variante	Notes
1	VF14233	2	Schraube M6x20SCREW M6X20	
2	VV13607	2	Sicherungsscheibe M6	
3	VF13533	2	BEILAGSCHEIBE M6X16X2	
4		2	ROTATION SHAFT BRAKE BLOCK	
5		2	ROTATION BRACKET BRAKE BLOCK	
6		2	FIXING PLATE BRAKE BLOCK	
7	VF13519	14	WASHER SPRING ID8	
8	55940338	2	SCREW M8X20	
9		2	BRAKE SHOE	
10		2	SLEEVE REAR WHEEL SHAFT	
11	VF14061	4	BEARING 6006	
12		2	BUSHING REAR WHEEL SHAFT	
13		2	BRAKE DISC	
14	55945935	2	SPROCKET	
15	VV13604	12	SCREW M8X20	
16	VF14547	12	NUT LOCK M10	
17	55940340	2	WHEEL	
18	VF14122	12	PLAIN WASHER DIAMETER 10 x 20 x 2WASHER PLAIN D10X20X2	
19	VF13634	12	BOLT M10x30	
20		2	WASHER PLAIN D25x39x4mm	
21		2	WASHER SPRING ID24	
22		2	NUT LOCK M24	
23		2	DECORATIVE COVER WHEEL	
24		6	SCREW M3X8	
25		2	COVER WHEEL	
26		2	SCREW M5X16 BLACK	
27	VF13514	12	WASHER PLAIN Ø8x16x1.5mm	
K1	55940306	2	BRAKE KIT	
K2	55945932	2	REAR WHEEL KIT FIXING	
K3	55945982	2	COVER WHEEL KIT	
K4	55940326	2	WHEEL HARDWARE KIT	
K5	55945936	2	REAR WHEEL KIT	

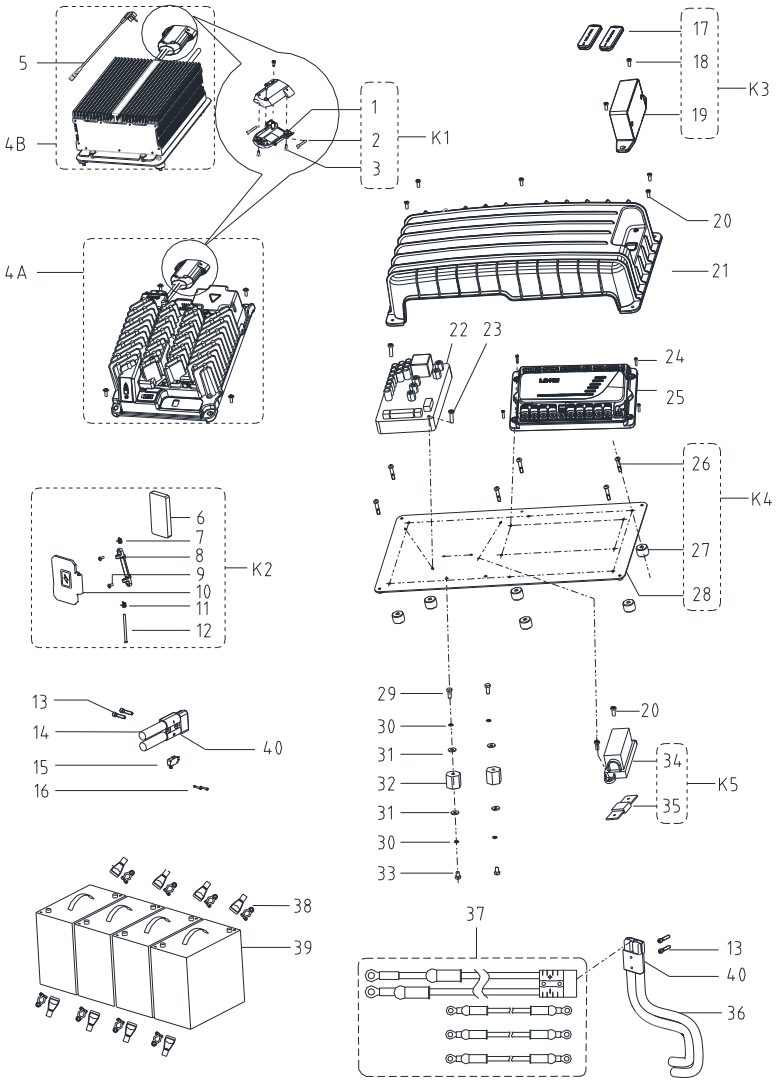
5
4B
4A
1
2
3
K1
17
18
19
K3
20
21
22
23
24
25
26
27
28
K4
6
7
8
9
10
11
12
K2
13
14
15
16
40
29
30
31
32
31
30
33
20
34
35
K5
38
39
37
13
40
36

Pos.	Artikel-Nr.	Menge	Variante	Notes
1		2	CHARGER COVER	
2	VF14070	2	SCREW M4X25	
3	VF14116	4	Flachkopfschraube ST4x16SCREW ST4X16	
4A	55945990	1	LADEGERÄT 24V 27A LI_ION ACECHARGER 24V 27A LI-ION ACE KIT	[1]
*4B	55945991	1	CHARGER 24V 25A LEAD-ACID KIT F EU/UKCHARGER 24V 25A LEAD-ACID KIT F EU/UK	[1]
	559505802	1	CHARGER 24V 25A LEAD ACID KIT F USCHARGER 24V 25A LEAD-ACID KIT F US	
5	VF89725	1	LADEGERÄT NETZKABEL EU-STECKERPOWER CORD EU 2M	
	VF89726	1	CHARGER POWER CABLE UK PLUGPOWER CORD UK 2M	
	VF89724	1	CHARGING CABLE FOR US 300V 16AWGPOWER CORD US 2M	
6		1	GASKET	
7		1	TORSIONAL SPRING	
8		1	CHARGER SOCKET BRACKET	
9		2	SCREW M4X10 BLACK	
10		1	CHARGER COVER	
11		1	TORSIONAL SPRING	
12		1	ROTATION SHAFT	
13		4	SCREW HEXAGON M6X30	
14B	559505781	1	HARNESS EXTERNAL CHARGE CONNECTION	[1]
15	VR12005	1	MICRO SWITCH	
16	VF14244	2	SCREW M3 x 20PH SCREW M3X20	
17	55945048	2	KEY FOB SIPFOB KEY	
18	VA13471	2	SCREW ST5 x 10PH SCREW ST5X10	
19		1	RECEIVER FOR FOB	
20		9	PH SCREW M5X12	
21	55945876	1	COVER CONTROLLER	
22	55945882	1	TRAVEL MOTOR CONTROLLER	
23		2	PH SCREW M5x40	
24	VV13635	4	SCREW M5X20 SST PHPH SCREW M5x20	
25	55945992	1	MAIN CONTROLLER	
	[ ]	2	FUSE 32V DC 15A	
	[ ]	1	FUSE 32V DC 30A	
	[ ]	1	FUSE 32V DC 40A	
	[ ]	1	FUSE 32V DC 150A	
26		8	PH SCREW M5X25	
27		8	WASHER RUBBER D20x15	
28		1	CONTROLLER PLATE	
29	VF13495	2	Schraube M6x16	
30	VV13607	4	Sicherungsscheibe M6WASHER SPRING D6	
31	VF13533	4	BEILAGSCHEIBE M6X16X2	
32	VR13449	2	CONNECT WIRE POLE	
33	VF14232	2	HEX SCREW M6x10	
34		1	HOLDER FUSE	
35		1	FUSE 150A	
36	559505785	1	HARNESS POWER DISTRIBUTION W CONNECTOR	
*37B	559506514	1	KIT CABLE POWER LEAD ACID BATTERY	
*38B	55940150	1	BATTERY CARD BUCKLE	[1]
39A	55945450	3	LI-ION BATTERIE 25.6V 50AHLI-ION BATTERY	[2]
*39B		4	BATTERY (CHECK LOCAL SALES FOR PART NUM- BERS)	[1]
40	VF81306-1	2	ANDERSON PLUG 175A 600VCONNECTER 175A RED	
K1	55940301	2	CHARGER COVER KIT	
K2	55945877	1	CHARGE PORT COVER KIT	
*K3	55945047	1	FOB KIT SC550	
K4	55945993	1	CONTROLLER PLATE KIT	
K5	55940314	1	FUSE KIT	
K6	559506114	1	MAIN CONTROLLER FUSE KIT	

Part Notes:

[1] - A for Li-ion, B for Lead-acid.

[2] - LI-ION BATTERY SYSTEM

A for Li-ion, B for Lead-acid.

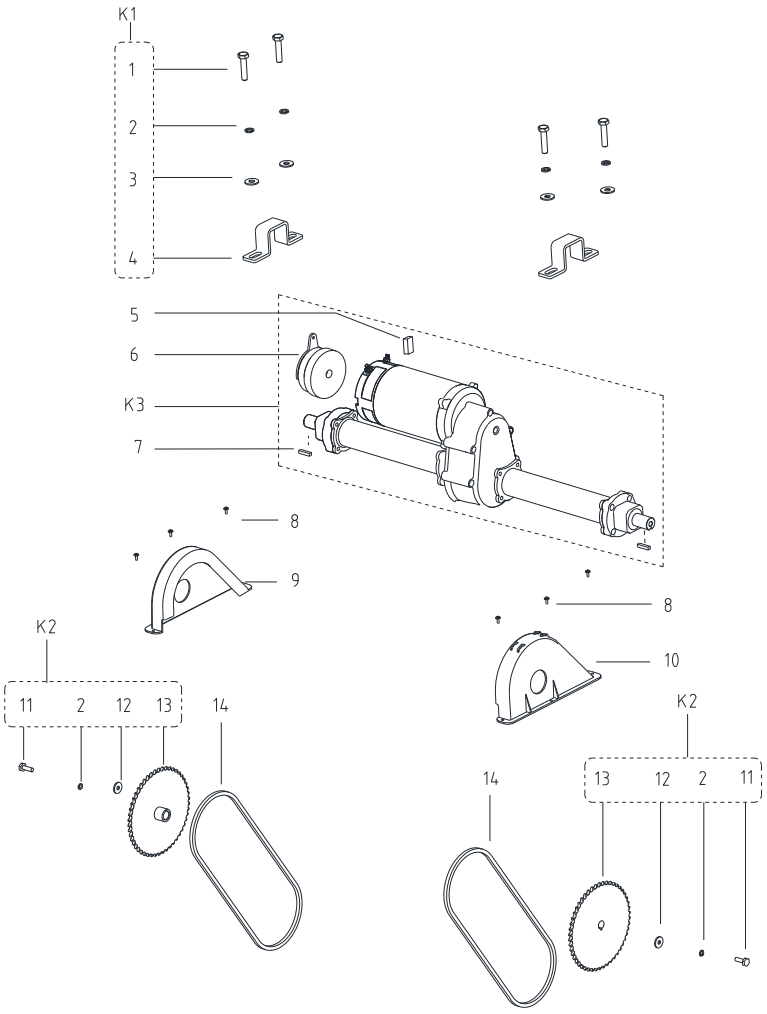
K1
1
2
3
4
5
6
K3
7
8
9
K2
11
2
12
13
14
8
10
K2
14
13
12
2
11

Pos.	Artikel-Nr.	Menge	Variante	Notes
1	VF13636	4	SCREW M10 x 45	
2	VF13518	6	WASHER LOCK F10	
3	VF13537	4	Beilagscheibe M10xM26x2	
4		2	FIXING PLATE DRIVE MOTOR	
5	VF89116	4	KOHLEBÜRSTEN-SETCARBON BRUSH	
6	55940132	1	ELECTROMAGNETIC BRAKE	
7	VR14003	2	KEY	
8	55940348	6	SCREW PWM5X14	
9	55940349	1	GUARD BOARD CHAIN RIGHT	
10	55940350	1	GUARD BOARD CHAIN LEFT	
11	VF14006	2	SCREW M10x20BOLT M10X20	
12	VR41111	2	WASHER PLAIN 10X33X3	
13		2	SPROCKET	
14	55940351	2	CHAIN ROLLER	
K1	55940317	2	DRIVE MOTOR HARDWARE KIT	
K2	55940318	2	SPROCKET KIT	
K3	55940133	1	DRIVE MOTOR KIT	

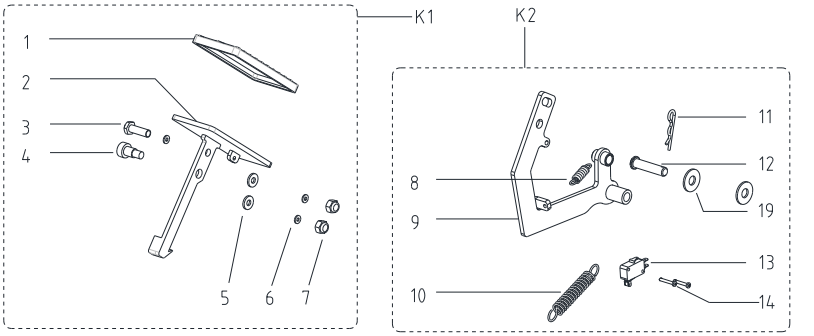
K1
K2
1
2
3
4
5
6
7
8
9
10
11
12
19
13
14

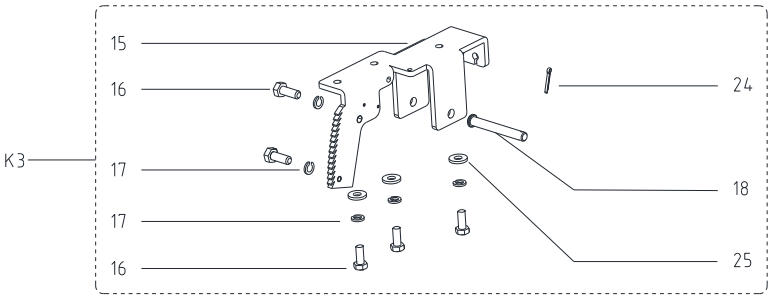
K3
15
16
17
17
16
24
18
25

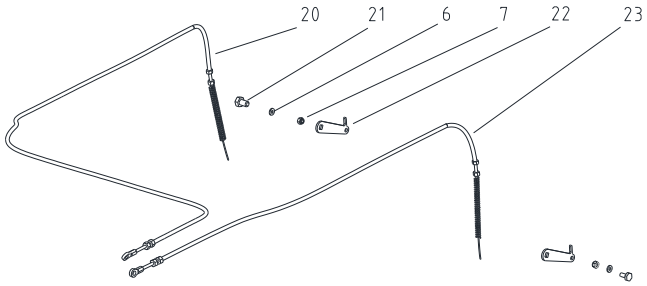
20
21
6
7
22
23

Pos.	Artikel-Nr.	Menge	Variante	Notes
1	55945995	1	PEDAL COVER RUBBER	
2		1	PEDAL BRAKE	
3		1	SCREW M8X25	
4	55945836	1	SCREW SHOULDER M8X11.5MM	
5		2	PLAIN WASHER D10	
6		5	WASHER PLAIN M8X20 X2	
7		3	NUT LOCK M8	
8		1	SPRING TENSION	
9		1	ROTATION PLATE BRAKE	
10	VF89318	1	SPRING 65MN	
11	VS13518	1	CONNECTING PIN	
12		1	ROTATION PIN	
13	55945883	1	MICRO-SWITCH	
14	VF14244	2	SCREW M3 x 20	
15		1	FIXING PLATE BRAKE	
16	VV13604	5	SCREW M8X20	
17	VF13519	5	WASHER SPRING ID8	
18	VR35008	1	TOP CONNECTING PIN	
19	VF13537	2	Beilagscheibe M10xM26x2	
20	55940352	1	CABLE 2130	
21	55940353	2	BOLT M8X16 HEX WITH HOLE	
22	55940354	2	BRACKET BRAKE BLOCK ROTATION	
23	55940355	1	CABLE 1500	
24	VF14084	1	PIN COTTER D3X24	
25	VF13514	3	WASHER PLAIN Ø8x16x1.5mm	
K1	55945828	1	BRAKE PEDAL KIT	
K2	55945829	1	BRAKE BRACKET KIT ROTATION	
K3	55940324	1	BRAKE BRACKET KIT FIXED	

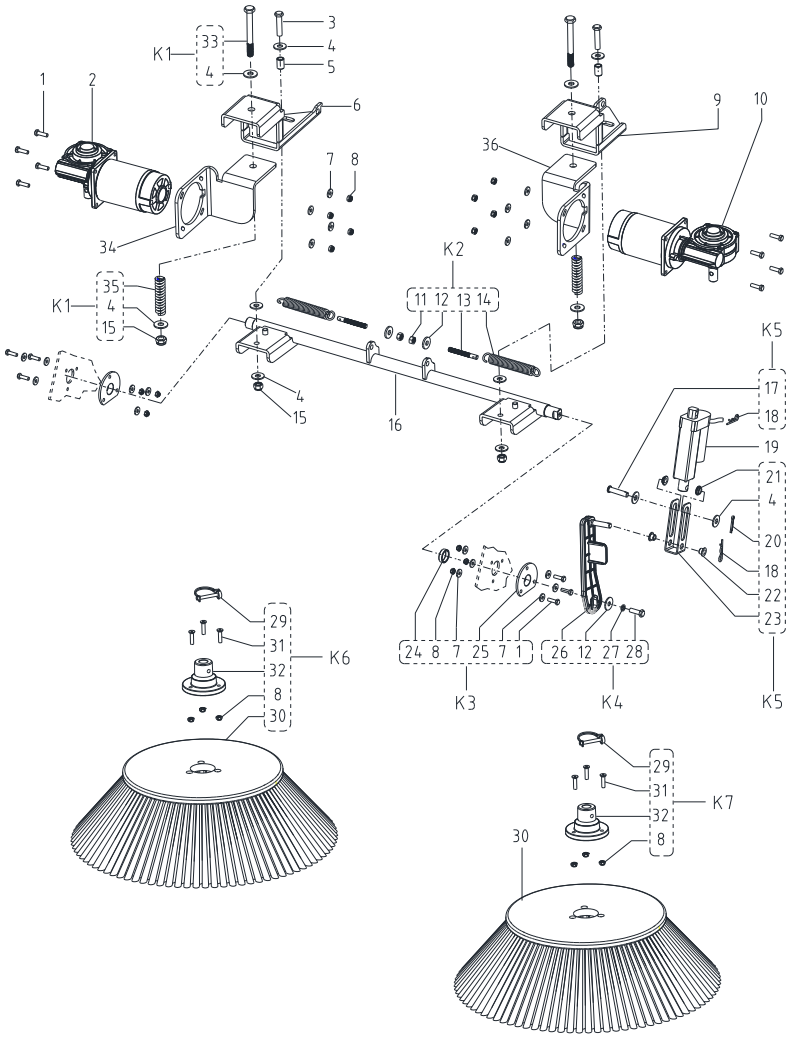
K1
33
4
3
4
5
1
2
6
7
8
34
K1
35
4
15
4
15
16
K2
11 12 13 14
9
10
36
K5
17
18
19
21
4
20
18
22
23
24 8 7 25 7 1
K3
26 12 27 28
K4
K5
K6
29
31
32
8
30
K7
29
31
32
8
30

Pos.	Artikel-Nr.	Menge	Variante	Notes
1	VF14233	14	Schraube M6x20SCREW M6X20	
2	55945884	1	MOTOR SIDE BROOM RIGHT	
3	VF13636	2	SCREW M10 x 45SCREW M10X45	
4	VF13537	8	Beilagscheibe M10xM26x2	
5	55940596	2	BUSHING COPPER 14 X 10 X 20.5BUSHING COPPER	
6	55946117	1	BRACKET SIDE BROOM RIGHT	
7	VF13533	20	BEILAGSCHEIBE M6X16X2	
8	VF14506	14	NUT LOCK SS M6	
9	55946118	1	BRACKET SIDE BROOM LEFT	
10	55945885	1	MOTOR SIDE BROOM LEFT	
11	VF13513	2	NUT M8 SS	
12	VF13542	3	WASHER PLAIN M8X26X2	
13	VF82047	2	SHAFT	
14		2	SPRING EXTENSION	
15	VF14547	2	NUT LOCK M10	
16	55946119	1	SHAFT ASSEMBLY SIDE BROOM	
17		1	PIN Ø9.8x45.5	
18	VS13518	2	CONNECTING PIN	
19	55945886	1	ACTUATOR KIT 24V 550N 55MM	
20		1	COTTER PIN Ø2.5X43	
21		2	BUSHING COPPER Ø10x5.5	
22	VF85338	2	BUSHING FLANGED	
23		1	LIFTING BRACKET SIDE BROOM	
24		1	BUSHING Ø27x 22.2 x 7.3	
25		2	BUSHING NYLON Ø22 x29.4x12	
26		1	BRACKET POSITION LIMITER	
27	VF13519	1	WASHER SPRING ID8	
28	VA13491	1	Schraube M8x25SCREW M8X25	
29		2	PIN Ø6x45	
30		2	BROOM SIDE ASSEMBLY	
*30		2	BROOM SIDE 300x500 MIX STEEL	
*30		2	BROOM SIDE 300x500 NATURAL	
31	VF14223	6	SCREW M6 x 25 PHSCREW M6X25 PH	
32		2	HUB SIDE BROOM	
33	55940930	2	SCREW M10X95 HEX SSSCREW M10X95 HEX SS	
34	55946124	1	BRACKET RT SIDE BROOM	
35	55940931	2	SPRING-COMP. D.E.10.3 wire D.4SPRING-COMP.	
36	55946125	1	BRACKET LT SIDE BROOM	
K1	55940588	2	BRACKET SPRING KIT	
K2	55940583	2	SHAFT SPRING HARDWARE KITSHAFT SPRING KIT	
K3	55940584	1	SHAFT BUSHING KIT	
K4	55946122	1	LIFTING BRACKET KIT	
K5	55940586	1	BRACKET POSITION LIMITER KITBRACKET KIT	
K6	55940587	2	BROOM SIDE KIT 300X500 PPL 0.8	
*K6	55940757	2	BROOM SIDE KIT MIX STEEL 300X500	
*K6	55940589	2	BROOM SIDE NATURAL 300X500BROOM SIDE KIT NATURAL 300x500	
K7	55940772	2	HUB KIT SIDE BROOM	

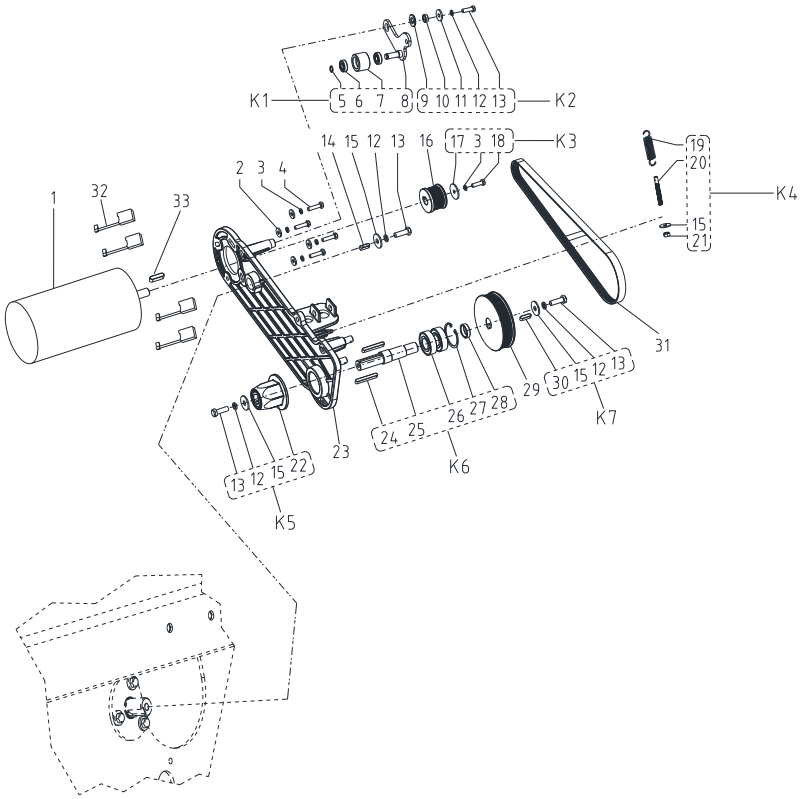
K1
5 6 7 8
9 10 11 12 13
K2
14 15 12 13
16
17 3 18
K3
19
20
K4
15
21
2 3 4
1
32
33
31
29
30 15 12 13
K7
26 27 28
24 25
K6
23
13 12 15 22
K5

Pos.	Artikel-Nr.	Menge	Variante	Notes
1	55945887	1	MOTOR MAIN BROOM	
2	55940655	4	WASHER PLAIN M6XM16X2WASHER PLAIN M6X16X2	
3	VV13607	5	Sicherungsscheibe M6	
4	55940657	4	HHC SCREW M6X25	
5	VF13520	1	SprengringRETAINING RING EXTERNAL	
6		2	BEARING BALL 6001-Z	
7		1	TENSION PULLEY ALUMINUM	
8		1	BRACKET TENSION PULLEY	
9		1	WASHER	
10		1	BUSHING COPPER	
11		1	WASHER Ø8.4x26.3x3	
12	VF13519	4	WASHER SPRING ID8	
13	VA13491	4	Schraube M8x25SCREW M8X25	
14	55940597	1	KEY F SHAFT 8 20 7KEY F SHAFT 8*20*7	
15	VF13542	4	WASHER PLAIN M8X26X2	
16	55940598	1	PULLEY V-RIBBED BELT P-8-PJ-40PULLEY V-RIBBED BELT	
17		1	WASHER Ø28x6.2x2	
18	VF14233	1	Schraube M6x20SCREW M6X20	
19	55940627	1	SPRING EXTENSION D.E.18.8 WIRE D.2.3SPRING EXTENSION D.E.18.8	
20	VF82047	1	SHAFT	
21	VF13513	1	NUT M8 SS	
22		1	HUB WHEEL NYLON D.65x48	
23	55946105	1	BRACKET MAIN BROOM RIGHT	
24	55940932	2	KEY F SHAFT 6X6X45	
25		1	TRANSMISSION SHAFT RIGHT	
26	VF14075	2	BEARING 6004 2RS	
27		1	RETAINING RING EXTERNAL	
28		1	BUSHING D.20.3x25x6.5	
29	55940488	1	PULLEY V-RIBBED BELT P-8-PJ-100PULLEY V-RIBBED BELT	
30		1	KEY F SHAFT 6X6X22	
31	55940489	1	BELT V-RIBBED 6-PJ-838	
32	VF89116	4	KOHLEBÜRSTEN-SETCARBON BRUSH	
33	55940131	1	KEY 5*5*25KEY 5X5X25	
K1	55946123	1	TENSION PULLEY KIT	
K2	55940563	1	SCREW TENSION PULLEY KIT	
K3	55940564	1	SCREW KIT DRIVING PULLEYSCREW KIT DRIVING PULLEY	
K4	55946128	1	SPRING EXTENSION KIT	
K5	55940566	1	HUB RT KIT	
K6	55940567	1	BEARING RT KIT	
K7	55940568	1	SCREW KIT FOLLOWER PULLEYSCREW KIT	

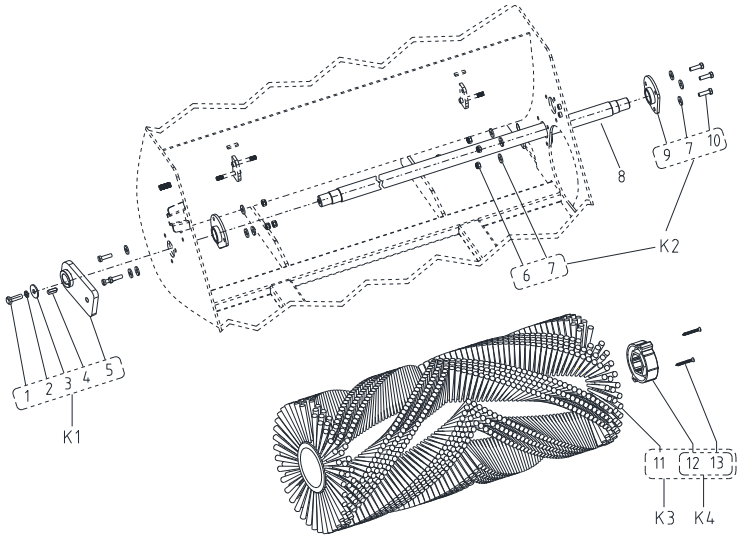
1
2
3
4
5
K1
6
7
8
9
7
10
K2
11
12
13
K3
K4

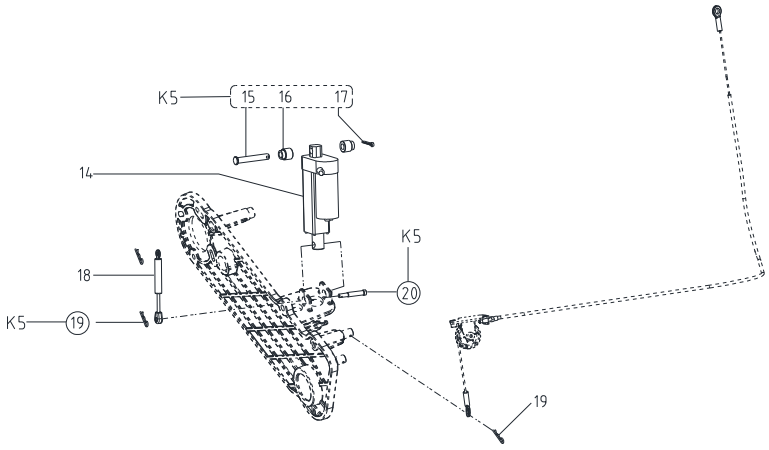
K5
15
16
17
14
K5
18
K5
19
20
19

Pos.	Artikel-Nr.	Menge	Variante	Notes
1	VA13491	1	Schraube M8x25SCREW M8X25	
2	VF13519	1	WASHER SPRING ID8	
3	VF13542	1	WASHER PLAIN M8X26X2	
4		1	KEY F SHAFT 6 X6 X22	
5		1	FIXING PLATE BRACKET RIGHT	
6	VF14506	6	NUT LOCK SS M6	
7	VF13533	12	BEILAGSCHEIBE M6X16X2	
8	55940491	1	SHAFT MAIN BROOM 30 D.25SHAFT MAIN BROOM 30# D.25	
9		2	BUSHING NYLON	
10	VF14233	6	Schraube M6x20SCREW M6X20	
11		1	BROOM 300X700 PPL0.5	
*11		1	MAIN BROOM MIX STEEL 300X700	
*11		1	MAIN BROOM NATURAL 300x700	
12		1	HUB WHEEL NYLON D.65x48	
13	VF14125	2	Schraube ST5x44	
K1	55946121	1	FIXING PLATE BRACKET RIGHT KIT	
K2	55940570	1	BUSHING KIT	
K3	55940604	1	MAIN BROOM KIT 300X700 PPL0.5	
*K3	55940756	1	MAIN BROOM KIT MIX STEEL 300X700	
*K3	55940590	1	BROOM MAIN NATURAL 300X700MAIN BROOM KIT NATURAL 300x700	
K4	55940369	1	HUB MAIN BROOM KIT	
14	55945886	1	ACTUATOR KIT 24V 550N 55MM	
15		1	PIN D.9.8x65.5	
16		2	BUSHING NYLON D.10.1x19.5	
17	VF14084	1	PIN COTTER D3X24	
18	55940492	1	SPRING AIR 180N	
19	VS13518	3	CONNECTING PIN	
20		1	PIN GALV 45# D.9.8x66	
K5	55940571	1	BUSHING KIT NYLON	

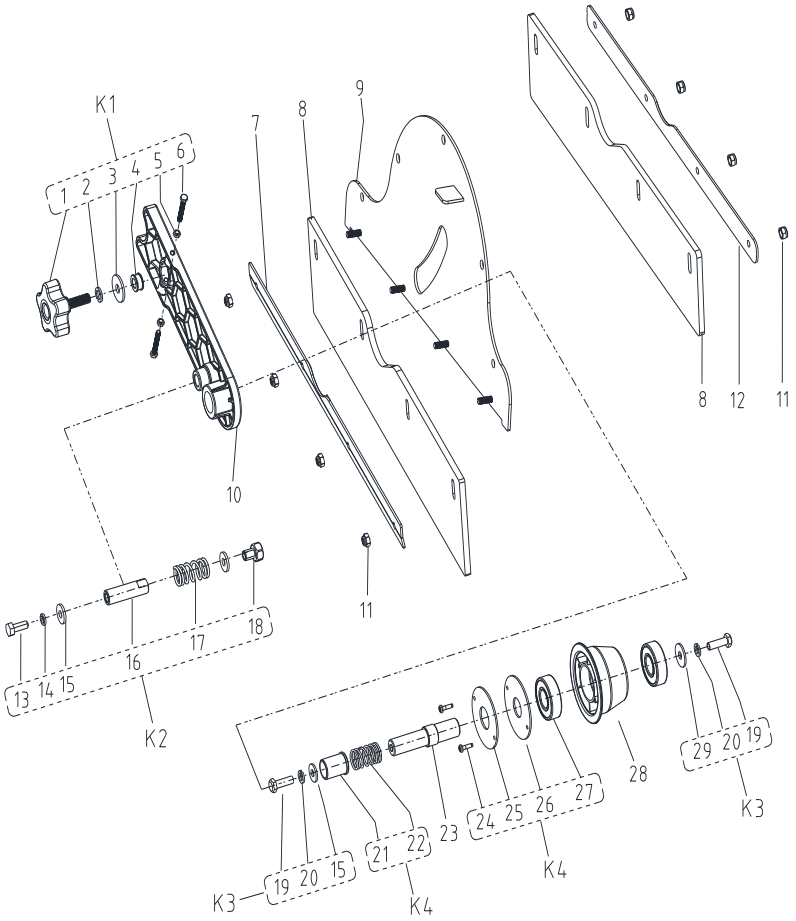
K1
1
2
3
4
5
6
7
8
9
10
11
8
12
11
13
14
15
16
17
18
K2
K3
19
20
15
21
22
K4
23
24
25
26
27
28
29
20
19
K3
K4

Pos.	Artikel-Nr.	Menge	Variante	Notes
1		1	SCREW KNOB M10x30	
2	VF13518	1	WASHER LOCK F10	
3		1	WASHER D.30x10x2.5	
4		1	BUSHING COPPER D.18.5x10x9.5	
5	VV13633	2	NUT M5	
6		2	SCREW M5X35 HEX	
7	55940494	1	STRAP LEFT BLADE	
8	55940934	2	BLADE SIDE NBRBLADE SIDE	
9	55945996	1	HATCH F MAIN BROOM	
10	55946120	1	BRACKET MAIN BROOM LEFT	
11	VF14506	8	NUT LOCK SS M6	
12	55940497	1	STRAP RIGHT BLADE	
13		1	SCREW M8X20	
14	VF13519	1	WASHER SPRING ID8WASHER SPRING D8	
15	VF13535	3	BEILAGSCHEIBE M8X26X2WASHER 8.1* 20*2	
16		1	GUIDING SHAFT	
17		1	SPRING COMPRESSION	
18		1	BALL BOLT M8x10	
19	VA13491	2	Schraube M8x25	
20	VF13519	2	WASHER SPRING ID8	
21		1	BUSHING D.22x30	
22		1	SPRING COMPRESSION D.E.22.2 WIRE D.2	
23	55940498	1	TRANSMISSION SHAFT LEFT D.22x79.5	
24	VF13543	2	SELF-TAPPING SCREW ST4 x 16SCREW ST4X16	
25		1	PLATE FIXED	
26		1	BEARING GASKET	
27	ZD45425	2	BEARING 6204 LU	
28	55945997	1	HUB NYLON D.110X30	
29	VF13542	1	WASHER PLAIN M8X26X2	
K1	55940574	1	SCREW KNOB KIT	
K2	55945998	1	BALL BOLT KIT	
K3	55940576	1	SCREW KIT F TRANSMISSION SHAFT	
K4	55940577	1	BEARING KIT	

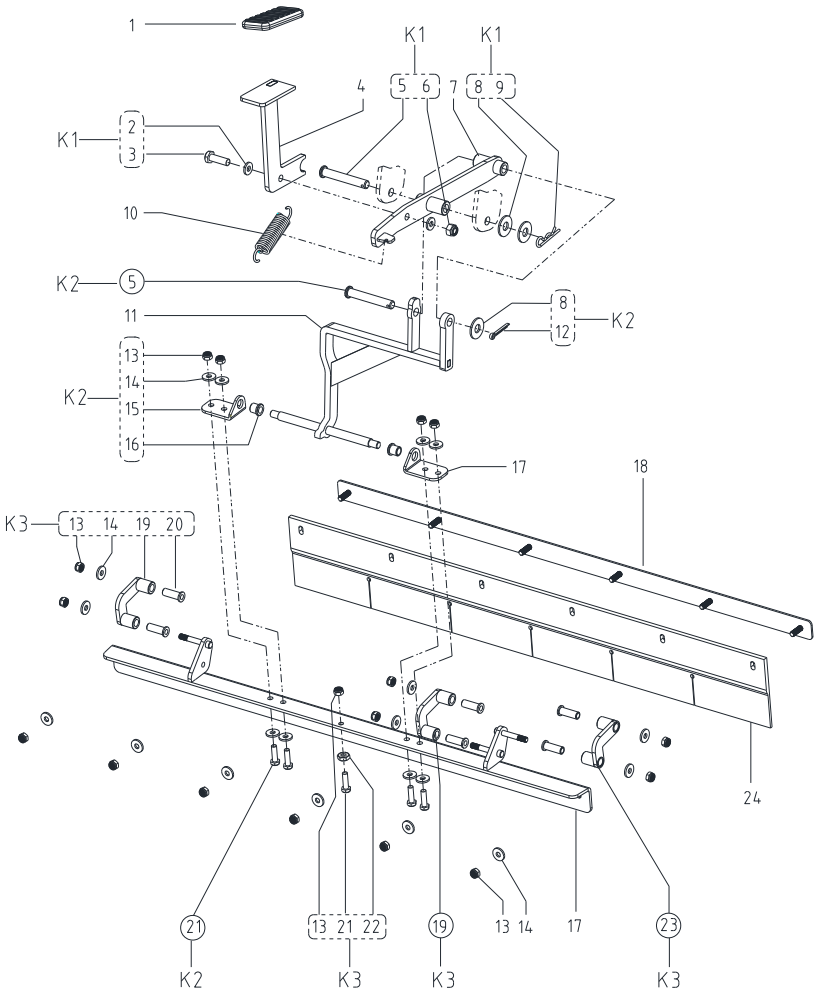
1
K1
K1
4
5 6
7
8 9
K1
2
3
10
K2
5
11
8
12
K2
13
14
K2
15
16
17
18
K3
13 14 19 20
24
21
K2
13 21 22
K3
19
K3
13 14
17
23
K3

Pos.	Artikel-Nr.	Menge	Variante	Notes
1	55945833	1	COVER RUBBER F BRAKE PEDAL	
2	VF13535	2	BEILAGSCHEIBE M8X26X2WASHER PLAIN M8XM20X2	
3	VA13491	1	Schraube M8x25SCREW M8X25	
4	55945999	1	LIFTING PEDAL FRONT BLADE	
5		2	PIN D.9.8x65.5	
6	VF14516	1	NUT LOCK M8	
7	55940626	1	BRACKET PEDAL	
8	VF13537	3	Beilagscheibe M10xM26x2	
9	VS13518	1	CONNECTING PIN	
10	55940627	1	SPRING EXTENSION D.E.18.8 WIRE D.2.3	
11	55940628	1	CONNECTING ROD	
12	VF14084	1	PIN COTTER D3X24	
13	VF14506	17	NUT LOCK SS M6	
14	VF13533	20	BEILAGSCHEIBE M6X16X2	
15	55940935	1	BRACKET GALVE Q235	
16		2	BUSHING Ø11x 8 x 12	
17	55945888	1	FLAP METAL L.705	
18	55940634	1	STRAP FRONT BLADE	
19		2	CONNECTING ROD	
20		6	BUSHING Ø8.5x 26.8	
21	VF14233	5	Schraube M6x20SCREW M6X20	
22	VF13521	1	NUT M6	
23		1	CONNECTING ROD	
24	55940638	1	BLADE FRONT NR	
K1	55940578	1	SCREW KIT PEDALPEDAL SCREW KIT	
K2	55940579	1	PIN KIT CONNECTING RODCONNECTING ROD PIN KIT	
K3	55940580	1	CONNECTING ROD KIT	

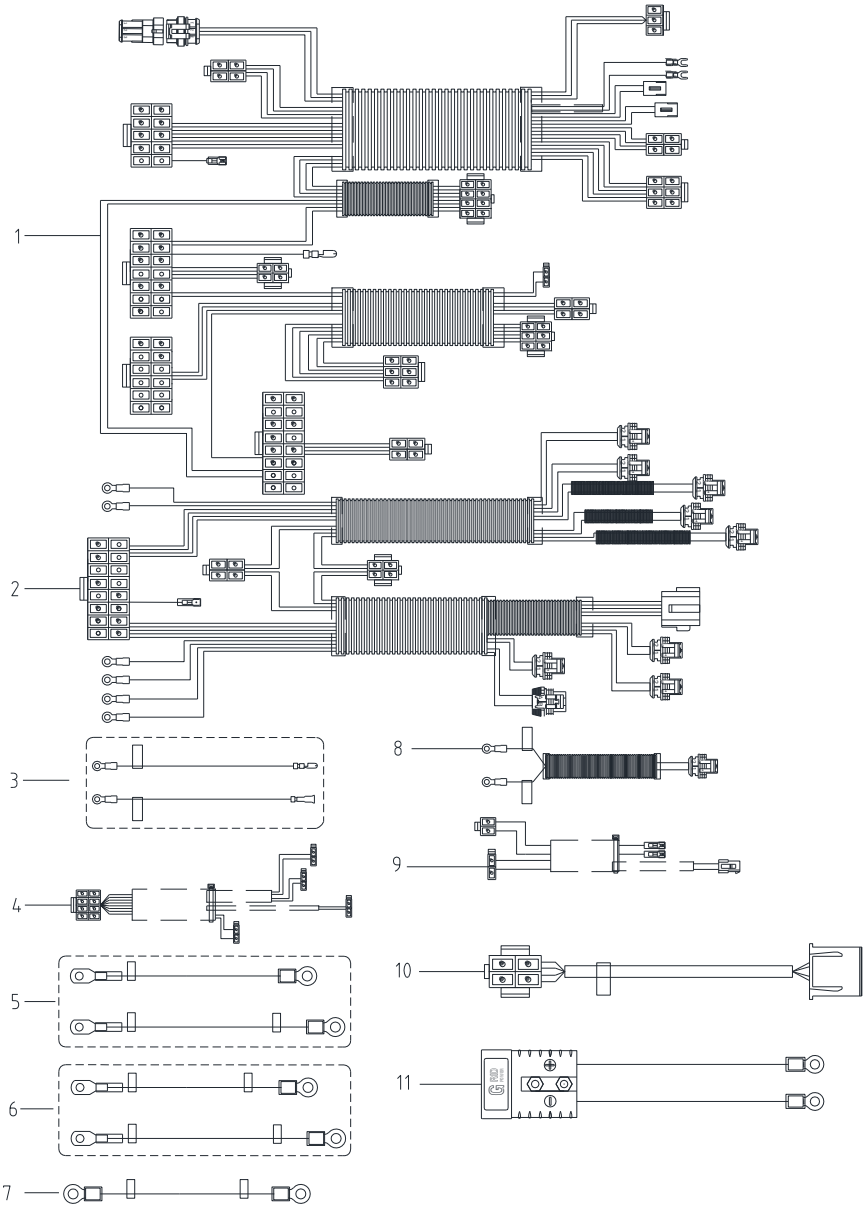
1
2
3
4
5
6
7
8
9
10
11

Pos.	Artikel-Nr.	Menge	Variante	Notes
1	559505770	1	HARNESS UI CONTROLLER	
2	559505771	1	HARNESS MAIN CONNECTION	
3	559505772	1	HARNESS SUCTION MOTOR	
4	559505774	1	HARNESS LIGHT AND SEAT	
5	559505779	1	HARNESS TMC POWER IN	
6	559505778	1	HARNESS MMC POWER IN	
7	559505780	1	HARNESS FUSE	
8	559505773	1	HARNESS FILTER SHAKER MOTOR	
9	559505777	1	HARNESS USB AND HORN	
10	559505790	1	HARNESS FRONT LIGHT	
11	559505785	1	HARNESS POWER DISTRIBUTION W CONNECTOR	

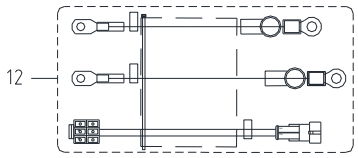



Li-ion

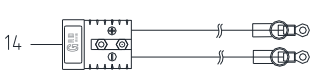



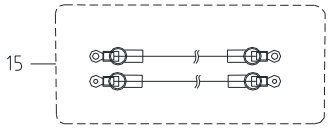

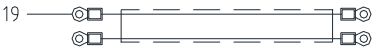



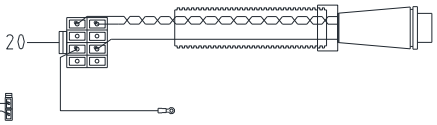

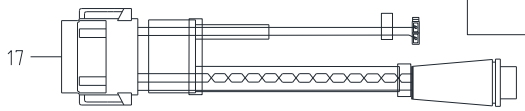

Lead-acid



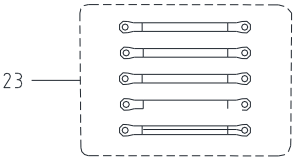

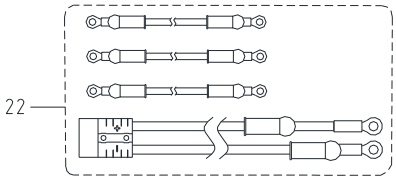

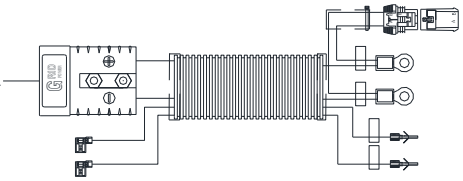

Optional

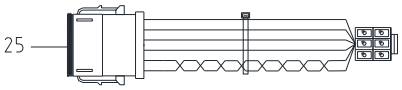

Pos.	Artikel-Nr.	Menge	Variante	Notes
12	559505783	1	HARNESS TRACTION MOTOR	
13	559506113	1	BRAKE CONNECTING WIRE KIT	
14	559504869	1	ACE DC BATTERY HARNESS KIT	
15	559504885	3	BATTERY CONNECT HARNESS KIT	
16	559505791	1	HARNESS ACE BATT TO BATT COMM	
17	559505788	1	HARNESS LI BATT CH COMM	
18	559505782	1	CABLE LI BATT CH POWER EU/UK KIT	
	559506115	1	CABLE LI BATT CH POWER US KIT	
19	559505786	1	HARNESS LI BATT CH DC	
20	559505787	1	HARNESS LI BATT COMM	
21	559505789	1	HARNESS MMC POWER SIGNAL	
22	559506514	1	KIT CABLE POWER LEAD ACID BATTERY	
23	55940143	1	WIRE KIT F BATTERY CONNECTION TPPL	
24	559505781	1	HARNESS EXTERNAL CHARGE CONNECTION	
*25	559505775	1	CONNECTIVITY KIT TC1 SW3000	

MAINTENANCE

Pos.	Artikel-Nr.	Menge	Variante	Notes
1	55945939	1	PROTECTIVE SLEEVE	
1	55945962	1	MAIN BROOM ADJUSTMENT KNOB KIT	
1	55940638	1	BLADE FRONT NR	
2	55940934	2	BLADE SIDE NBR	
2	55945945	1	MAIN BROOM ADJUSTMENT CABLE	
2	55945965	1	STEERING WHEEL	
3	55945947	2	POTENTIOMETER KNOB BLUE	
3	55945946	1	PHONE STORAGE KIT	
3	55940330	1	BLADE MAIN BROOM REAR NBR	
4	VF89116	4	KOHLEBÜRSTEN-SET	
4	55945942	1	BUZZER KIT	
4	55945824	2	POTENTIOMETER	
5	55945948	1	CONTROL PANEL KIT	
5	55945952	1	FORNT COVER KIT	
5	55940497	1	STRAP RIGHT BLADE	
6	55940494	1	STRAP LEFT BLADE	
6	55945954	1	COVER INLET KIT	
6	55945956	1	UI CONTROLLER PCB	
7	55945953	1	FRONT LIGHT KIT	
7	55945888	1	FLAP METAL L.705	
7	55945906	1	FILTERSET KIT 580X401X80 PES 3,5M²	
8	55945949	1	FRONT SPROCKET TENSION WHEEL KIT	
8	55945955	1	EMERGENCY STOP KIT	
9	55945984	1	WARNING LIGHT	
9	55945839	1	SEAT KIT	
10	55945841	1	CABLE KIT	
10	55945875	2	TAILLIGHT KIT	
11	55945879	1	VACUUM MOTOR KIT	
11	55945973	2	LATCH KIT	
12	55945826	1	RIGHT COVER	
12	55945985	1	VIBRATION MOTOR	
13	55945969	1	CONTAINER HANDLE KIT	
13	55945980	1	LEFT COVER	
14	55945976	1	KNOB BRIGHT BLUE	
14	55945970	4	4 INCH REAR WHEEL KIT	
15	55945989	2	WHEEL 2.5INCH BLACK	
15	55945832	1	BATTERY TRAY KIT F LI ION	[1]
16	55940319	1	BATTERY TRAY KIT	[1]
16	55945974	1	GASKET	
17	55945909	1	ACCELERATOR PEDAL KIT	
17	55945882	1	TRAVEL MOTOR CONTROLLER	
18	55945992	1	MAIN CONTROLLER	
18	55945979	1	DIRECTIONAL WHEEL KIT	
19	55945968	1	GASKET	
19	559506114	1	MAIN CONTROLLER FUSE KIT	
20	55940133	1	DRIVE MOTOR KIT	
20	55945982	2	COVER WHEEL KIT	
21	55945936	2	REAR WHEEL KIT	
21	55940351	2	CHAIN ROLLER	
22	55945943	1	USB WITH WATERPROOF COVER	
22	55945995	1	PEDAL COVER RUBBER	
23	55945883	1	MICRO-SWITCH	
23	55945884	1	MOTOR SIDE BROOM RIGHT	
24	55945885	1	MOTOR SIDE BROOM LEFT	
24	55940489	1	BELT V-RIBBED 6-PJ-838	
25	55940488	1	PULLEY V-RIBBED BELT P-8-PJ-100	
25	55945887	1	MOTOR MAIN BROOM	
26	55945886	1	ACTUATOR KIT 24V 550N 55MM	
26	55945983	2	KNOB KNURLED M8X40 BLUE	

Pos.	Artikel-Nr.	Menge	Variante	Notes
27	55945997	1	HUB NYLON D.110X30	
27	55940369	1	HUB MAIN BROOM KIT	
28	55940363	2	VALVE ONE-WAY	
28	55945998	1	BALL BOLT KIT	
29	55940552	1	GASKET VACUUM MOTOR LID	
29	55940306	2	BRAKE KIT	
30	55940772	1	HUB KIT SIDE BROOM	
30	VR12005	1	MICRO SWITCH	
31	55945878	1	SPEED REDUCTION KIT	
31	VF14075	2	BEARING 6004 2RS	
32	55940131	1	KEY 5*5*25	
32	55945880	1	SCREW KIT	
33	55945881	1	FILTER COVER	
33	55946123	1	TENSION PULLEY KIT	
34	55940577	1	BEARING KIT	
35	55940891	2	SPRAY NOZZLE KIT	
36	55945889	1	FILTER KIT 82X46X62 PA	
37	55940894	1	PUMP KIT	
38	55940856	1	SWITCH PUMP HIGH-PRESSURE KIT	
39	55946105	1	BRACKET MAIN BROOM RIGHT	
40	55940352	1	CABLE 2130	
41	55940355	1	CABLE 1500	
42	55940314	1	FUSE KIT	
1	55945837	1	SEAT ARMREST ASSEMBLY SET	
2	55945830	1	SEAT BELT SET	
3	9100003246	1	TC-1 MODULE SIP	[2]
4	559505775	1	CONNECTIVITY KIT TC1 SW3000	
5	55945951	1	BLUE LIGHT WARNING KIT	
6	55945835	1	FILTER KIT HEPA13 580X401X80 3.5	
7	55940320	1	KORB BLEIAKKU	[3]
8	55945990	1	LADEGERÄT 24V 27A LI_ION ACE	
9	55945991	1	CHARGER 24V 25A LEAD-ACID KIT F EU/UK	[4]
10	559505802	1	CHARGER 24V 25A LEAD ACID KIT F US	
11	55945048	2	KEY FOB SIP	
12	55940150	1	BATTERY CARD BUCKLE	[4]
13	55945450	1	LI-ION BATTERIE 25.6V 50AH	[5]
14	55945047	1	FOB KIT SC550	
15	55940587	2	BROOM SIDE KIT 300X500 PPL 0.8	
16	55940757	2	BROOM SIDE KIT MIX STEEL 300X500	
17	55940589	2	BROOM SIDE NATURAL 300X500	
18	55940604	1	MAIN BROOM KIT 300X700 PPL0.5	
19	55940756	1	MAIN BROOM KIT MIX STEEL 300X700	
20	55940590	1	BROOM MAIN NATURAL 300X700	

Part Notes:

[1] - A for Li-ion, B for Lead-acid

[2] - INSTRUCTIONS INSTALL FOR KIT 55945049 B

[3] - *K5B cannot be used individually. It should be with K6B.

A for Li-ion, B for Lead-acid

* Means optional

[4] - A for Li-ion, B for Lead-acid.

[5] - LI-ION BATTERY SYSTEM

A for Li-ion, B for Lead-acid.

TC1 - Module



Resource notes:

(50000740) SW3000 EU/UK SWEEPER
(50000758) SW3000 LI-ION NA SWEEPER
(50000743) SW3000 CN SWEEPER
(50000742) SW3000 LI-ION EU/UK SWEEPER

© 2023 - Nilfisk A/S