PARTS LIST



2026.08.27

NILFISK

TABLE OF CONTENTS

GENERAL VIEW 1
ACCELERATOR PEDAL 3
ACCESSORIES 1 5
ACCESSORIES 2 7
ACCESSORIES 4 9
ACCESSORIES 5 11
ACCESSORIES 3 13
BATTERIES 15
BROOM CLOSING 17
BROOM LEVERS 19
CONTROL PANEL 21
CONTROL PANEL COVER 23
ELECTRIC SYSTEM 25
ELECTRIC SYSTEM - UNTIL S/N 3810162100037 27
ELECTRIC WHEEL 29
EXTENSIBLE ARM 31
FLOOR MAT AND BEACON 33
FRAME 1 35
FRAME 2 37
FRAME SYSTEM 1 39
FRAME SYSTEM 2 41
FRONT LIFT FLAP 43
HOPPER SYSTEM 45
HYDRAULIC SYSTEM 47
LATERAL COVERS 49
LEFT BROOM 51
LIFTING ARMS 53
MAIN BROOM 55
MAIN BROOM ADJUSTMENT 57
MOTOR WHEEL 59
OPTIONALS AND ACCESSORIES 61
PANEL FILTER 63
PEDAL BRAKE 65
RECOMMENDED SPARE PARTS 67
RIGHT BROOM 70
SEAT COVER 72
STEERING COLUMN 74
VACUUM SYSTEM 76
WIRING DIAGRAM 78

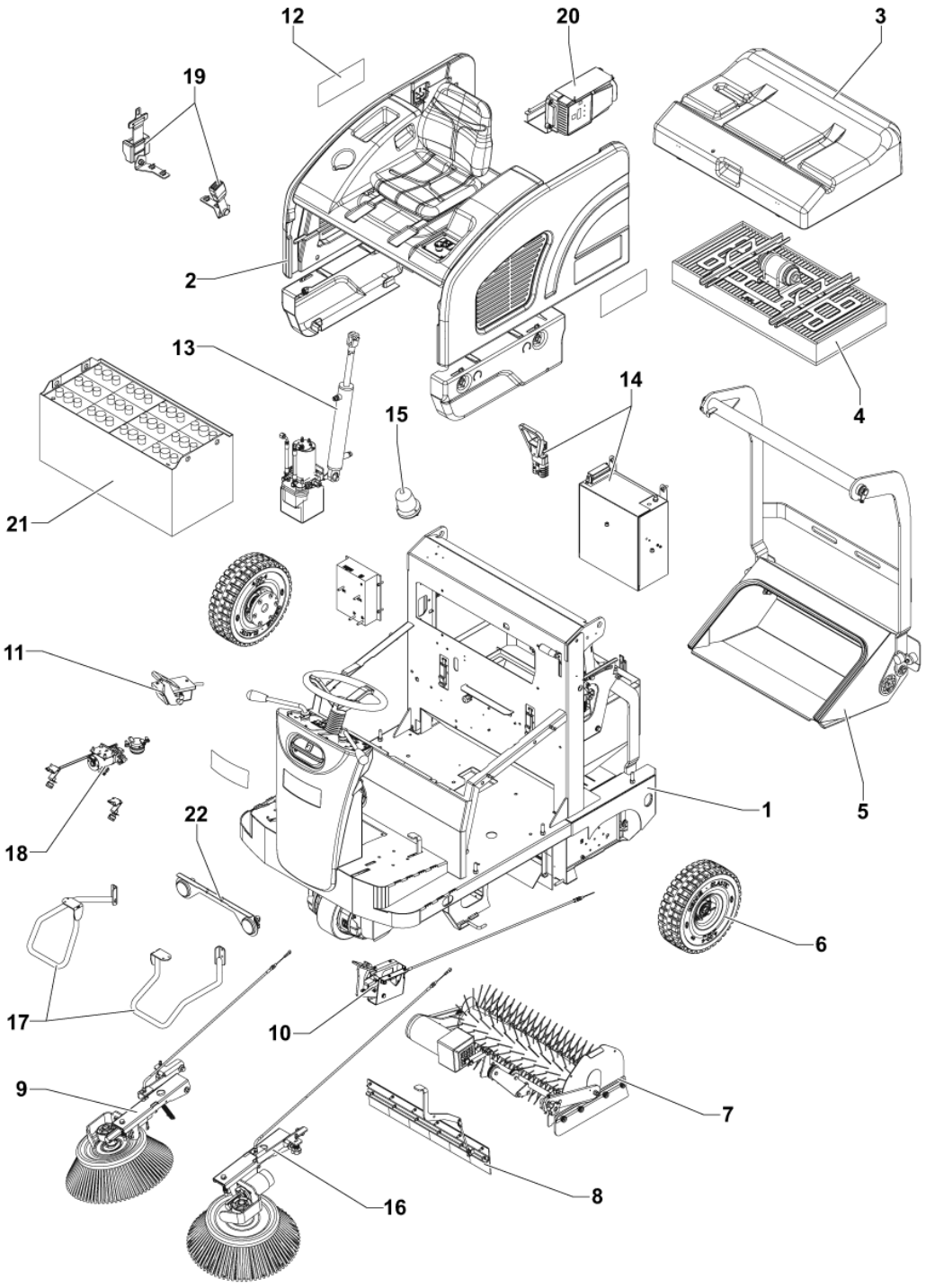
12
20
3
19
2
4
13
14
15
21
11
1
5
18
22
6
17
10
9
7
8
16

Pos.	Artikel-Nr.	Menge	Variante	Notes
1			CHASSIS ASSY	
2			COVERS AND COFFINS ASSY	
3			VACUUM COVER ASSY	
4			PANEL FILTER ASSY	
5			HOPPER ASSY	
6			REAR WHEELS ASSY	
7			CENTRAL BROOM ASSY	
8			FRONT FLAP ASSY	
9			RIGHT BROOM ASSY	
10			BRAKE PEDAL ASSY	
11			ACCELERATOR PEDAL ASSY	
12	1464639000	1	DECALS SW4000 B NIL KIT	
13			HYDRAULIC SYSTEM ASSY	
14			ELECTRIC SYSTEM ASSY	
15			FLASHING LIGHT ASSY	
16			LEFT BROOM ASSY	
17			SIDE BROOM GUARD ASSY	
18			DUSTGUARD SYSTEM ASSY	
19			SAFETY BELTS ASSY	
20			BATTERY CHARGER ASSY	
21			BATTERY ASSY	
22			WORKING LIGHT ASSY	
NS	56118159	1	CARTON-SIDE PANEL	[1]
NS	56118160	1	CARTON-END PANEL	[1]
NS	56118161	1	LOCK-BAYONET	

Part Notes:

[1] - NO REPLACEMENT

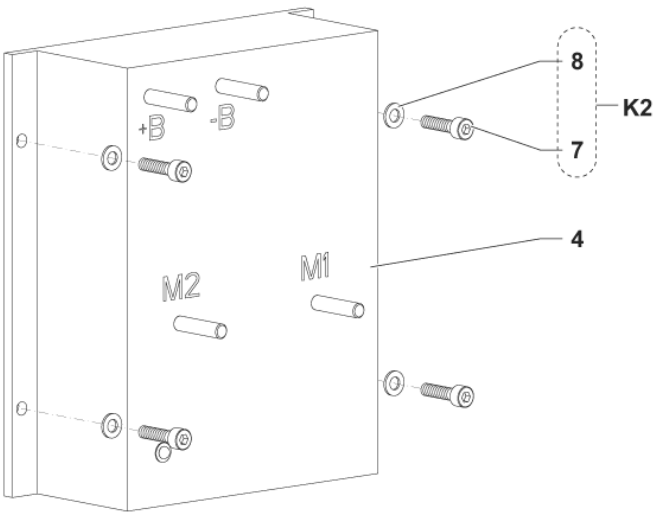
+B
-B
8
K2
7
4
M2
M1

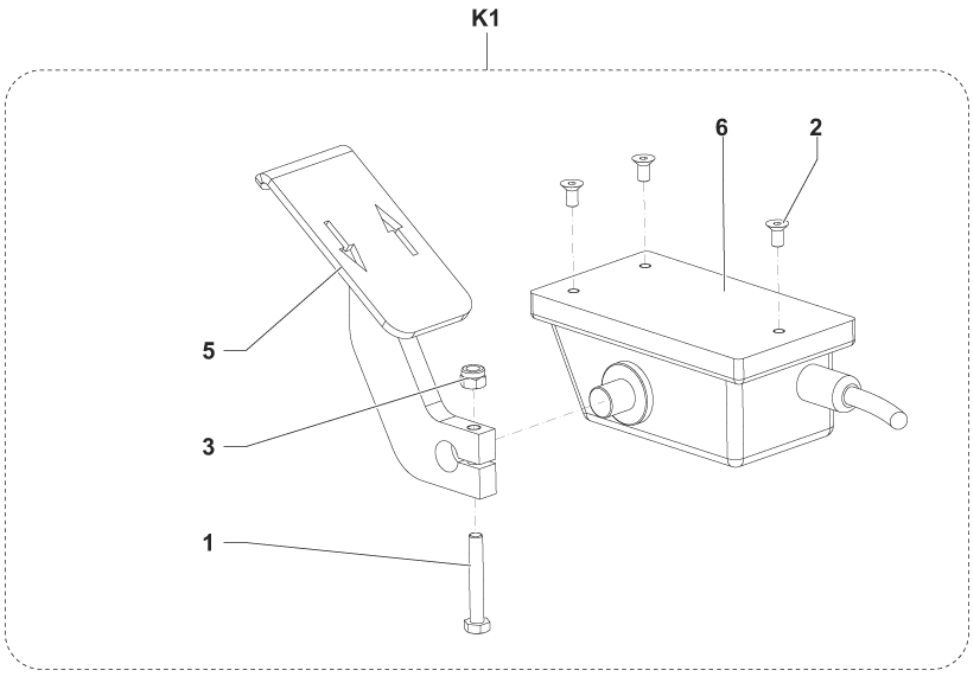
K1
6
2
5
3
1

Pos.	Artikel-Nr.	Menge	Variante	Notes
1		1	K1	
2		3	K1	
3		1	K1	
4	1466210000	1	CONTROLLER DRIVE WHEEL PKD	
4	1466207000	1	PROGRAMMER F ELECTRONIC CARDS PKD	[1]
5	1464368000	1	PEDAL THROTTLE	
6	1464425000	1	ELEKTRONISCHES GASPEDAL	
7		4	K2	
8		4	K2	
K1	1464922000	1	ACCELERATOR ELECTRONIC CPL KIT	
K2	1465070000	1	HARDWARE TRACTION BOARD KIT	

Part Notes:

[1] - SERVICE TOOL - NOT SHOWN



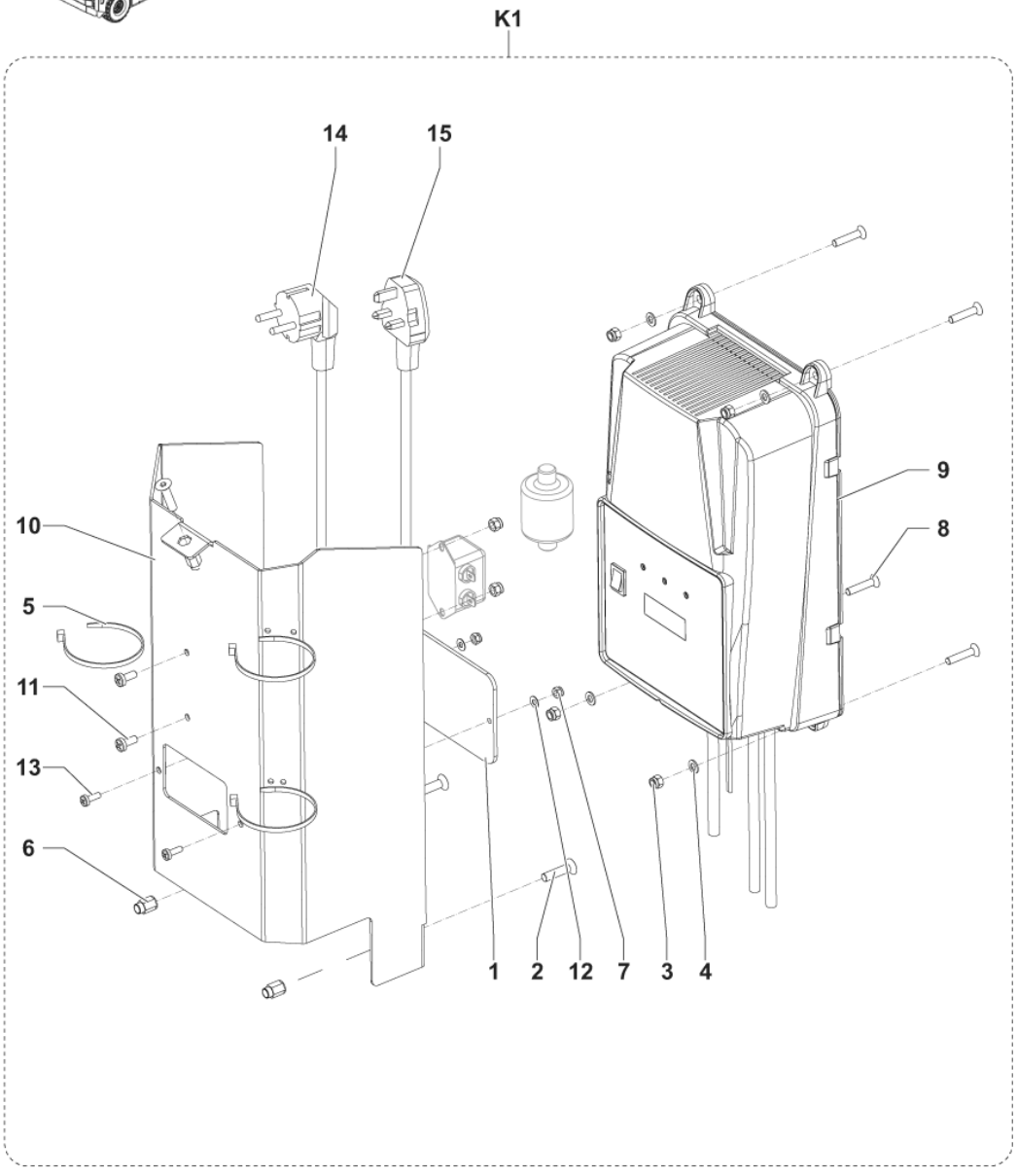
K1
14
15
9
8
10
5
11
13
6
1
2
12
7
3
4

Pos.	Artikel-Nr.	Menge	Variante	Notes
1	9100001064	1	COVER F INSPECTION PLATE TRANSP. PKD	
2		3	K1	
3		6	K1	
4		4	K1	
5		3	K1	
6		3	K1	
7		2	K1	
8		4	K1	
9		1	K1	
10	1465131000	1	COVER BATTERY CHARGER	
11		2	K1	
12		2	K1	
13		2	K1	
14	9100000787	1	CABLE EXTENSION EU PLUG L.2000 PKD	[1]
15	1466318000	1	CABLE EXTENSION UK PLUG L.2000MM SIP	[1]
K1	1465175000	1	Einbauladegerät 24V-30A 230V	[2]

Part Notes:

[1] - FOR EU/UK MACHINE
[2] - OPTIONAL - INSTALLATION INSTRUCTION REF. 1465324000

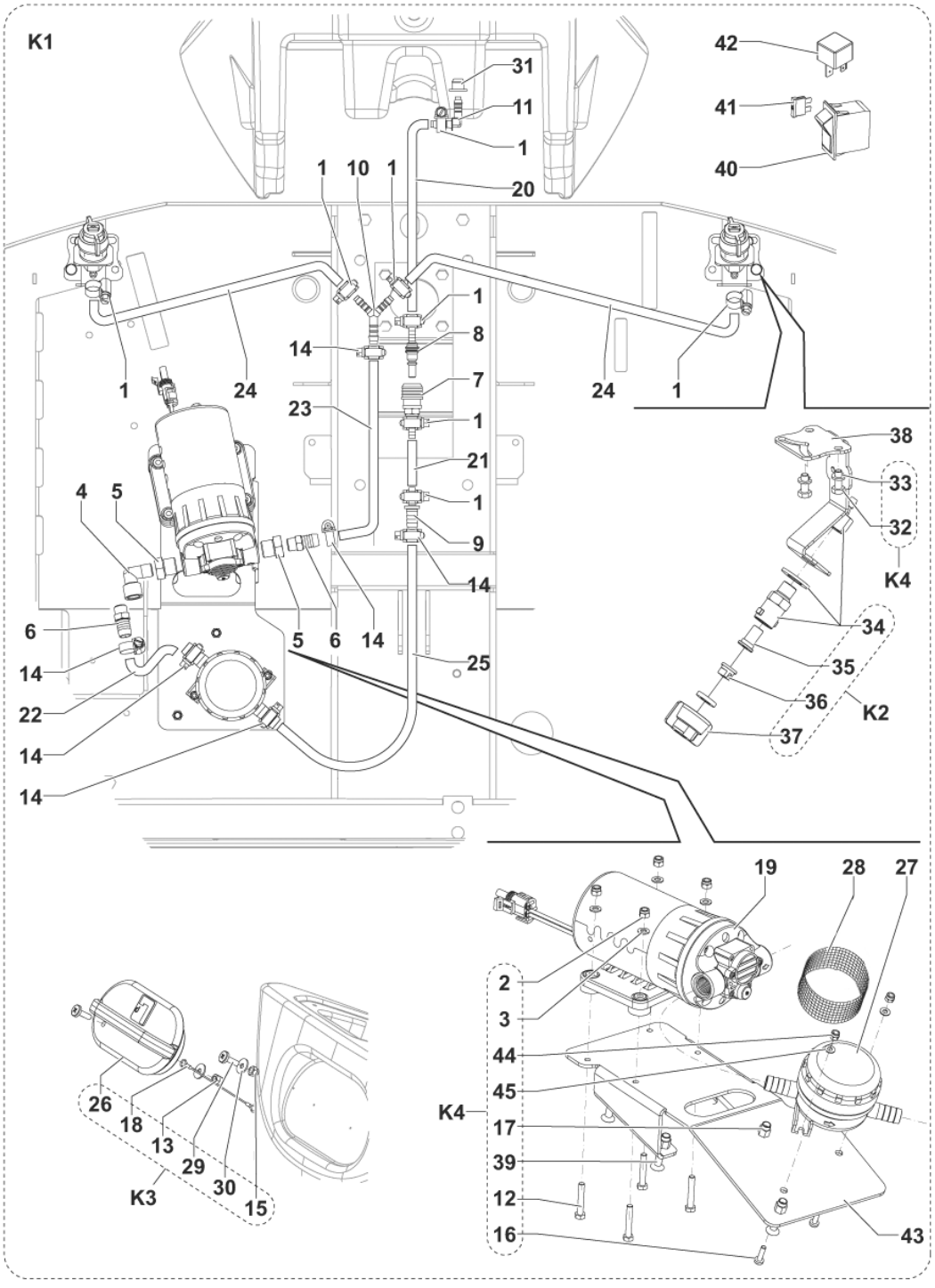
K1
42
41
40
31
11
1
1
10
1
20
1
8
14
7
1
24
23
24
1
1
21
1
9
14
4
5
6
14
5
6
14
25
22
14
14
38
33
32
K4
34
35
36
K2
37
19
28
27
2
3
44
45
K4
17
39
12
16
43
26
18
13
29
30
15
K3

Pos.	Artikel-Nr.	Menge	Variante	Notes
1		8	K5	
2		4	K4	
3		4	K4	
4		1	K6	
5		2	K6	
6		2	K6	
7	1465915000	1	CONNECTOR FEMALE	
8	1465916000	1	CONNECTOR MALE	
9		1	K6	
10		1	K6	
11		1	K6	
12		4	K4	
13		1	K3	
14		6	K5	
15		1	K3	
16		2	K4	
17		6	K4	
18		1	K3	
19	1465647000	1	PUMP WATER KIT	
20		1	K5	
21		1	K5	
22		1	K5	
23		1	K5	
24		2	K5	
25		1	K5	
26		1	K3	
27	9100000860	1	Wasserfilter	
28	9100000861	1	NET WATER FILTER REINFORCED PKD	
29		2	K3	
30		2	K3	
31		1	K6	
32		4	K4	
33		4	K4	
34	33020865	2	ADAPTER SPRAY KIT	
35	1467245000	2	Rueckschlagventil Filter	
36	1467246000	2	NOZZLE SPRAY D. 0.33 S.S. PKD	
36	1467247000	2	NOZZLE SPRAY D. 0.53 BRASS PKD	
37	1467248000	2	RING NUT QUICK COUPLING PKD	
38	1464473000	2	SUPPORT NOZZLES	
39		6	K4	
40	1465401000	1	SWITCH DUST GUARD KIT	
41	145 9852 000	1	FUSE BLADE 5A UL	
42	1464289000	1	Relais SR 1301 24V20/30A	[1]
43	1465172000	1	Drehgriff Potentiometer	
44		2	K4	
45		2	K4	
K1	1464953000	1	Dust-Guard-System	[2]
K2	33019324	2	Düsen Spray Kit	
K3	1465355000	1	CAP SOLUTION TANK KIT	
K4	1465356000	1	HARDWARE DUSTGUARD KIT	
K5	1465357000	1	HOSES POLYESTER DUSTGUARD KIT	[3]
K6	1465358000	1	FITTINGS AND REDUCTIONS DUST GUARD KIT	[3]

Part Notes:

[1] - TSB-FC-2017-024 hopper relay SW4000
[2] - OPTIONAL - INSTALLATION INSTRUCTION REF. 1465244000
[3] - NOT SHOWN

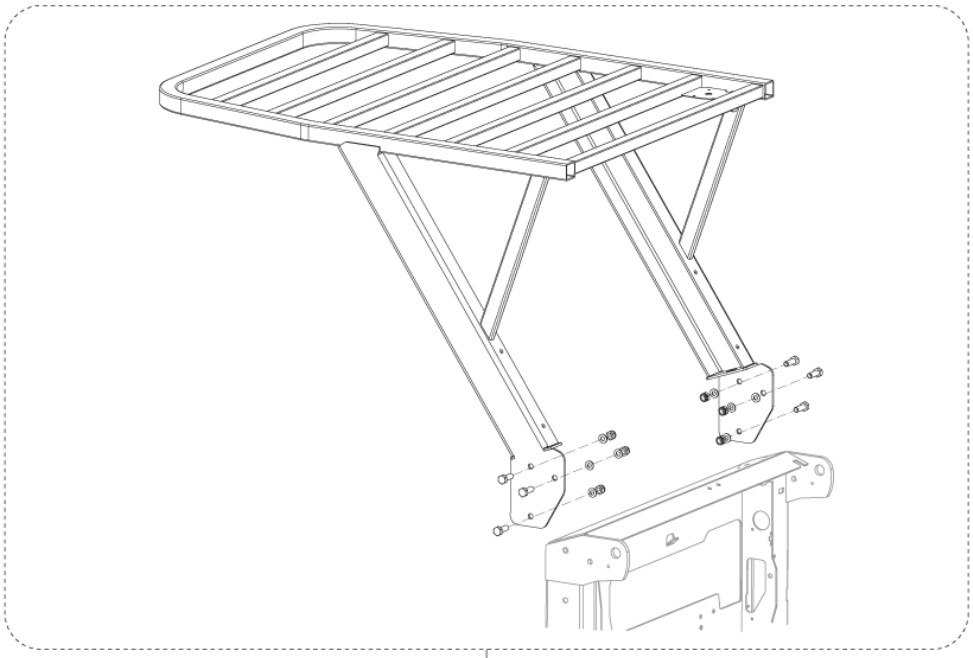

K1

K2

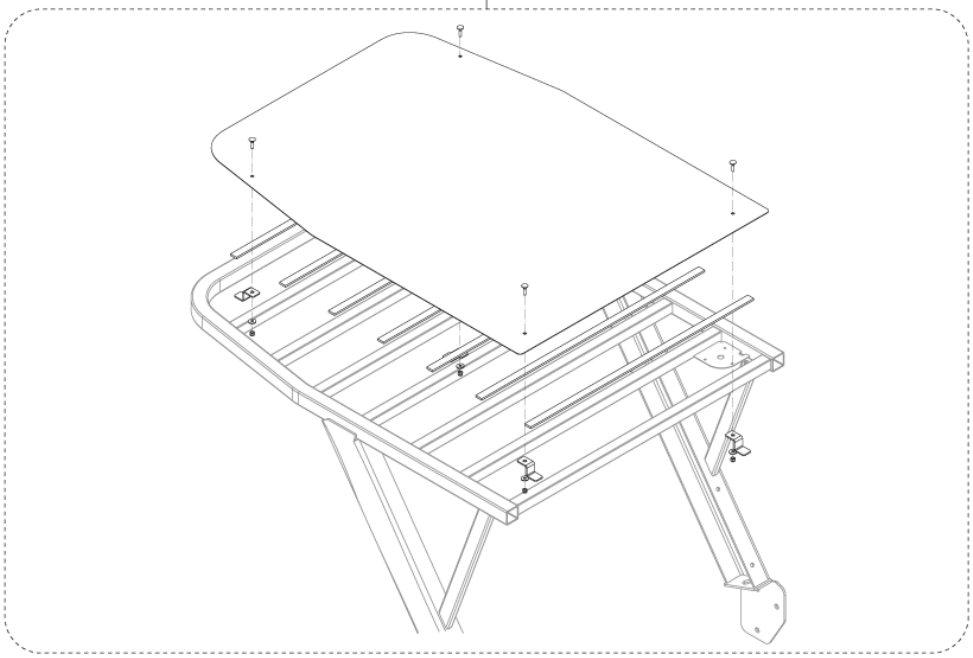

Pos.	Artikel-Nr.	Menge	Variante	Notes
K1	1464952000	1	Fahrerschutzdach-Set	[1]
K2	1464956000	1	Fahrerschutzdach-Set	[2]

Part Notes:

[1] - OPTIONAL - INSTALLATION INSTRUCTIONS REF. 1465246000
[2] - OPTIONAL - INSTALLATION INSTRUCTIONS REF. 1465247000

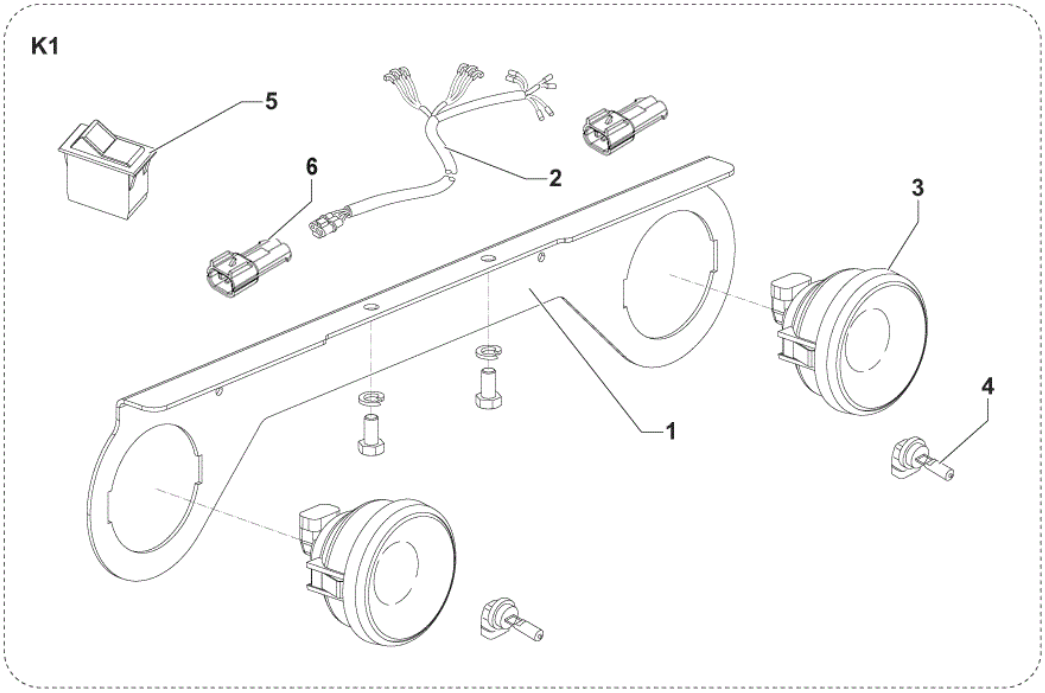
K1
5
6
2
3
4
1

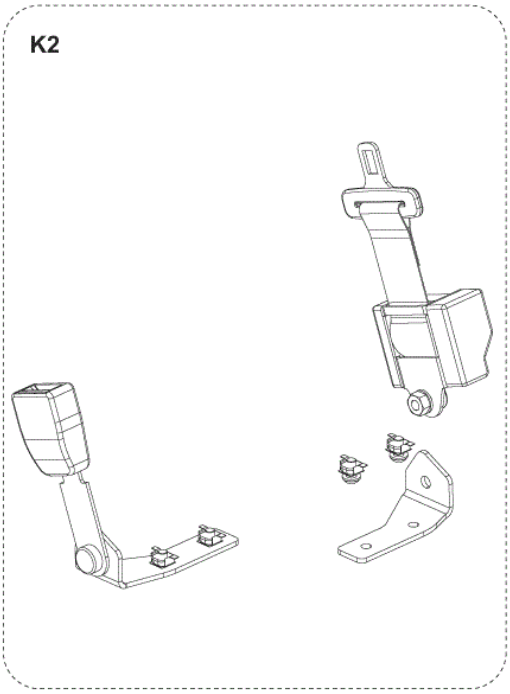
K2

Pos.	Artikel-Nr.	Menge	Variante	Notes
1	1466357000	1	BRACKET FRONT LIGHT SIP	
2	1466359000	1	HARNESS WORK LIGHTS SIP	
3	1466356000	2	LIGHT WORK 24V CPL SIP	
4	1466358000	2	BULB LIGHT 24V 70W H3 SIP	
5	146 1167 000	1	Schalter	
6	1467754000	2	Steckverbinder 2-Wege-Kit	[1]
7	1466362000	1	LIGHTS FRONT UPGRADE KIT	[2]
K1	1466346000	1	Lichter-Set, vorne, 24V 70W	[3]
K1	1466347000	1	LIGHTS FRONT KIT 24V 70W SW4000 UL	[4]
K2	1464954000	1	Sicherheitsgurt-Set	[5]
K3	33019556	1	Armlehne-Set rechts	[6]
K4	1464960000	1	Armlehne-Set links	[7]

Part Notes:

[1] - NO REPLACEMENT
[2] - NOT SHOWN - POS. 1-3-4
[3] - OPTIONAL - INSTALLATION INSTRUCTION REF. 1465245000
SEE TSB-FC-2015-013
[4] - ONLY FOR "US" ADVANCE VERSION
[5] - OPTIONAL - INSTALLATION INSTRUCTION REF. 1465248000
[6] - OPTIONAL - NOT SHOWN - INSTALLATION INSTRUCTION REF. 33019211
[7] - OPTIONAL - NOT SHOWN - INSTALLATION INSTRUCTION REF. 1465249000

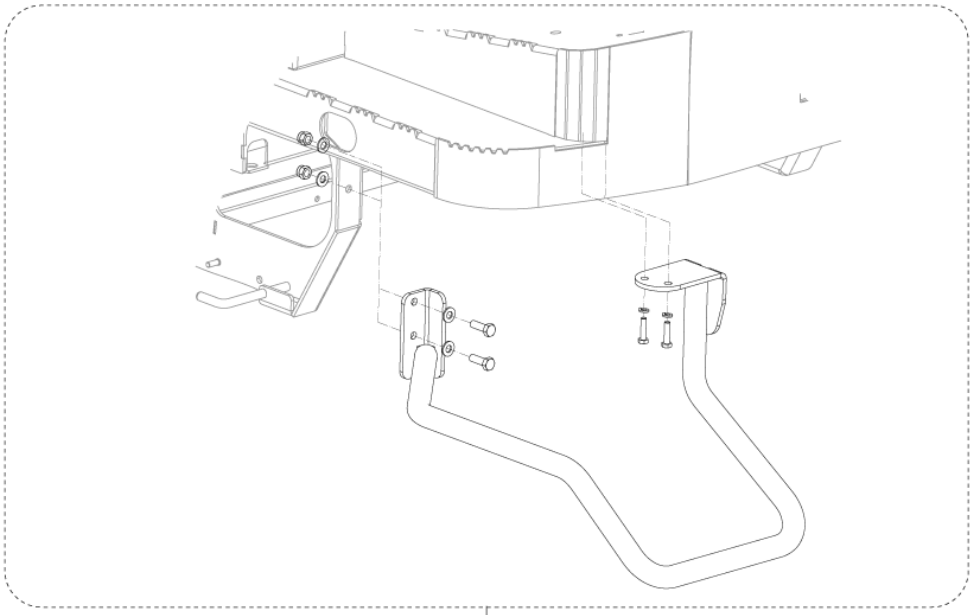

K1

K2

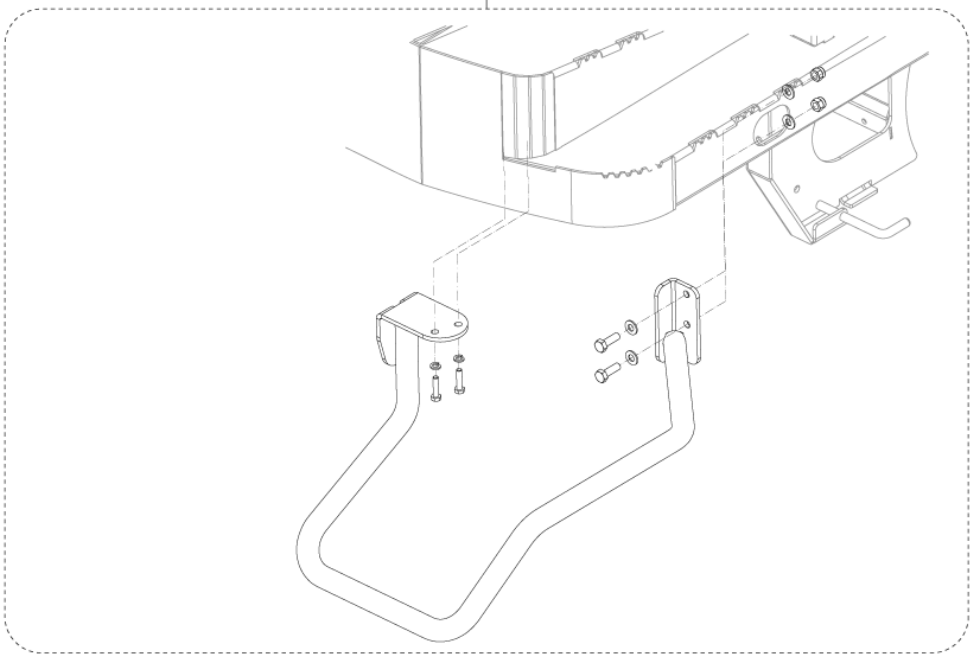

Pos.	Artikel-Nr.	Menge	Variante	Notes
K1	1464958000	1	Seitenbesen-Schutz-Set, rechts	[1]
K2	1464959000	1	Seitenbesen-Schutz-Set, links	[1]

Part Notes:

[1] - OPTIONAL - INSTALLATION INSTRUCTIONS REF. 1465243000

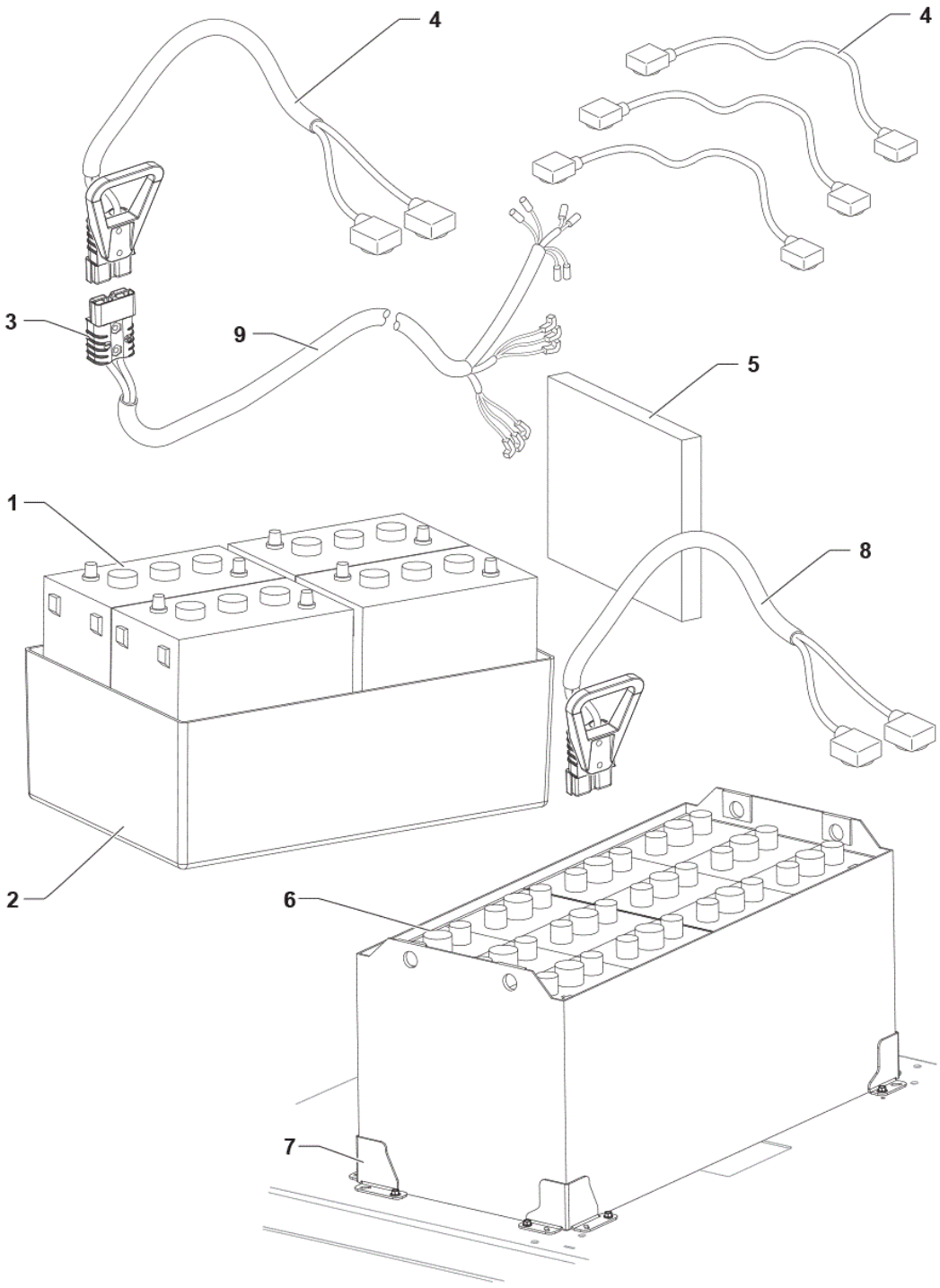
4
4
3
9
5
1
8
2
6
7

Pos.	Artikel-Nr.	Menge	Variante	Notes
1	80565000	4	Nassbatterie Semi T Monoblock, 6V-255 Ah	[1]
1	80564000	4	Gelbatterie Monoblock, 6V-180 Ah	[2]
1	80564100	4	Gelbatterie Monoblock, 6V-240 Ah	[1]
1	80563200	4	Nassbatterie Monoblock, 6V-200 Ah	[1]
2	145 4692 000	1	Batteriebehälter	
3	1467029000	2	CONNECTOR 175A RED PKD	
4	1467534000	1	HARNESS BATTERY KIT	[3]
4	1467704000	1	HARNESS BATTERY US KIT	[4]
5	146 0668 000	4	Isolierplatte	
6	80563300	1	Nassbatterie+Trog, 24V-300 Ah, Aquamatic	
6	80565200	1	Batterie 24V-360 Ah m. Aquamatic im Tray	[1]
6	80565300	1	Gelbatt. 24V-330Ah, Einzelzellen im Tray	[1]
7	1465171000	1	Batteriebefestigungs-Set	[5]
8	1467717000	1	HARNESS F BATTERY TRACTION US SIP	[6]
9	1464338000	1	HARNESS MACHINE BATTERY	[3]
9	1467718000	1	HARNESS MACHINE BATTERY US SIP	[4]

Part Notes:

[1] - OPTIONAL

[2] - OPTIONAL

TSB-FC-2019-033 Exide GEL battery

DE TSB-FC-2019-033 Exide GEL Batterien

[3] - EU VERSION ONLY

[4] - US VERSION ONLY

[5] - OPTIONAL - USE WITH THE STEEL TRAY BATTERY

[6] - ITEM NO LONGER AVAILABLE
OPTIONAL - US VERSION ONLY - USE WITH THE STEEL TRAY BATTERY

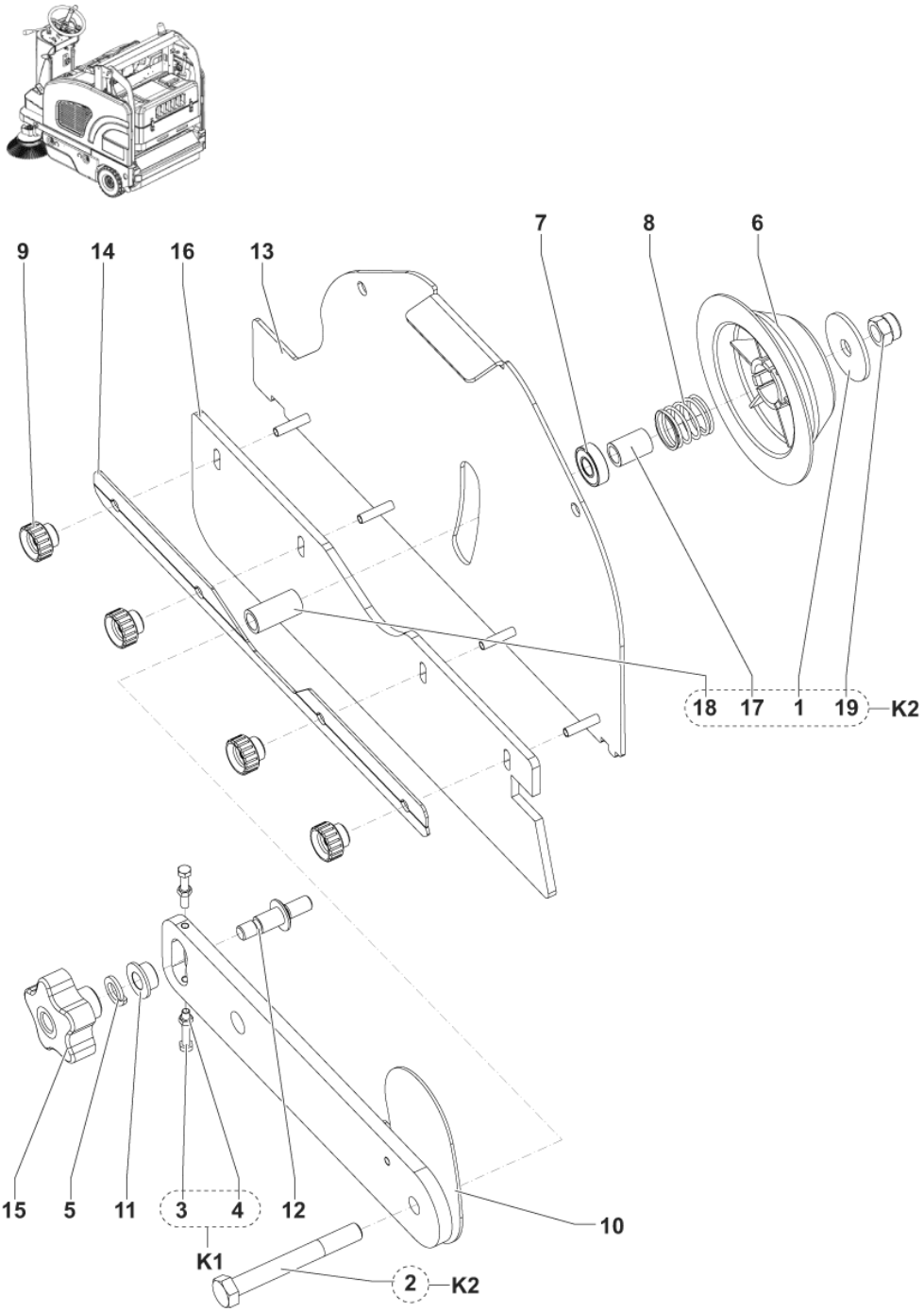
9
14
16
13
7
8
6
18
17
1
19
K2
15
5
11
3
4
12
10
K1
2
K2

Pos.	Artikel-Nr.	Menge	Variante	Notes
1		1	K2	
2		1	K2	
3		2	K1	
4		2	K1	
5	33006010	1	Scheibe	
6	1467023000	1	HUB LEFT MAIN BROOM PKD	
7	44905699	1	BEARING BALL 6001 2RS PKD	
8	1467024000	1	SPRING PKD	
9	1466374000	4	KNOB KNURLED M6 FEMALE PKD	
10	1464180000	1	LEVER MAIN BROOM SUPPORT	
11	1464181000	1	BUSHING SUPPORT LEVER	
12	1464182000	1	PIN MAIN BROOM ARM	
13	1464183000	1	HATCH MAIN BROOM	
14	1464278000	1	PLATE SIDE KIRT FIXING	
15	1464476000	1	KNOB LOBES M10 F. W/YELLOW CAP	
16	1465396000	1	SCHÜRZE KOMPLETT	
16	1464951000	1	Seitenschürzen	[1]
17		1	K2	
18		1	K2	
19		1	K2	
K1	1465057000	1	HARDWARE MAIN BROOM LEVER SUPPORT KIT	
K2	1465058000	1	HARDWARE MAIN BROOM IDLE HUB KIT	

Part Notes:

[1] - OPTIONAL

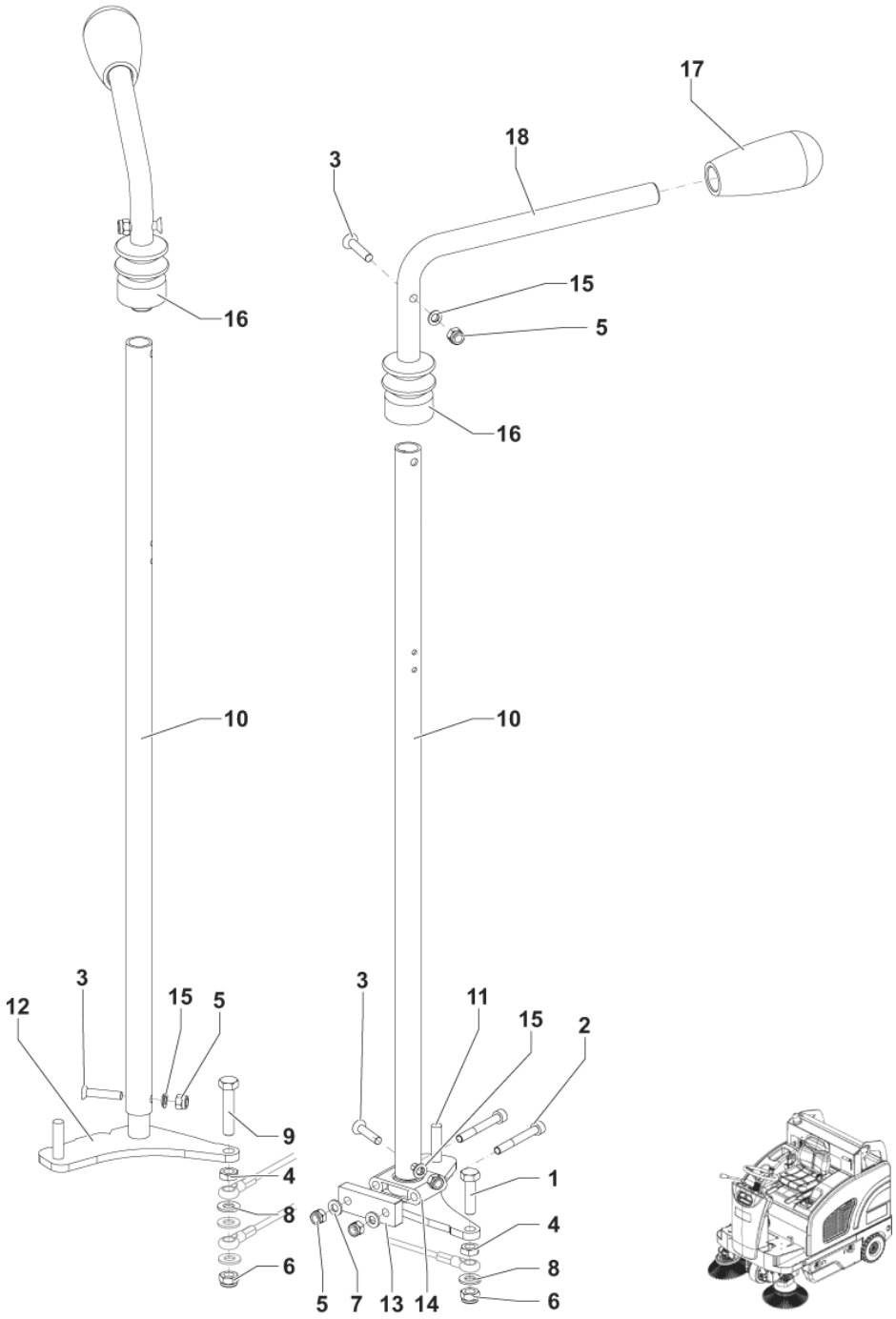
17
18
3
15
5
16
16
10
10
12
3
15
5
9
4
8
6
3
11
15
2
1
4
8
6
5
7
13
14

Pos.	Artikel-Nr.	Menge	Variante	Notes
1		1	K1	
2		2	K1	
3		4	K1	
4		2	K1	
5		6	K1	
6		2	K1	
7		2	K1	
8		2	K1	
9		1	K1	
10	1464174000	2	PIPE LEVER EXTENSION GALV.	
11	1464175000	1	LEVER MAIN BROOM	
12	1464176000	1	LEVER SIDE BROOM	
13	1465090000	1	PLATE FOR ARTICULATED SUPPORT	
14	1465091000	1	BEARING PILLOW BLOCK	
15		4	K1	
16	146 2456 000	2	Gummibalg	
17	1464151000	2	HANDLE LEVER	
18	1467872000	2	LEVER BROOM CONTROL SIP	
K1	1464820000	1	HARDWARE BROOM LEVERS KIT	[1]

Part Notes:

[1] - NOT SHOWN

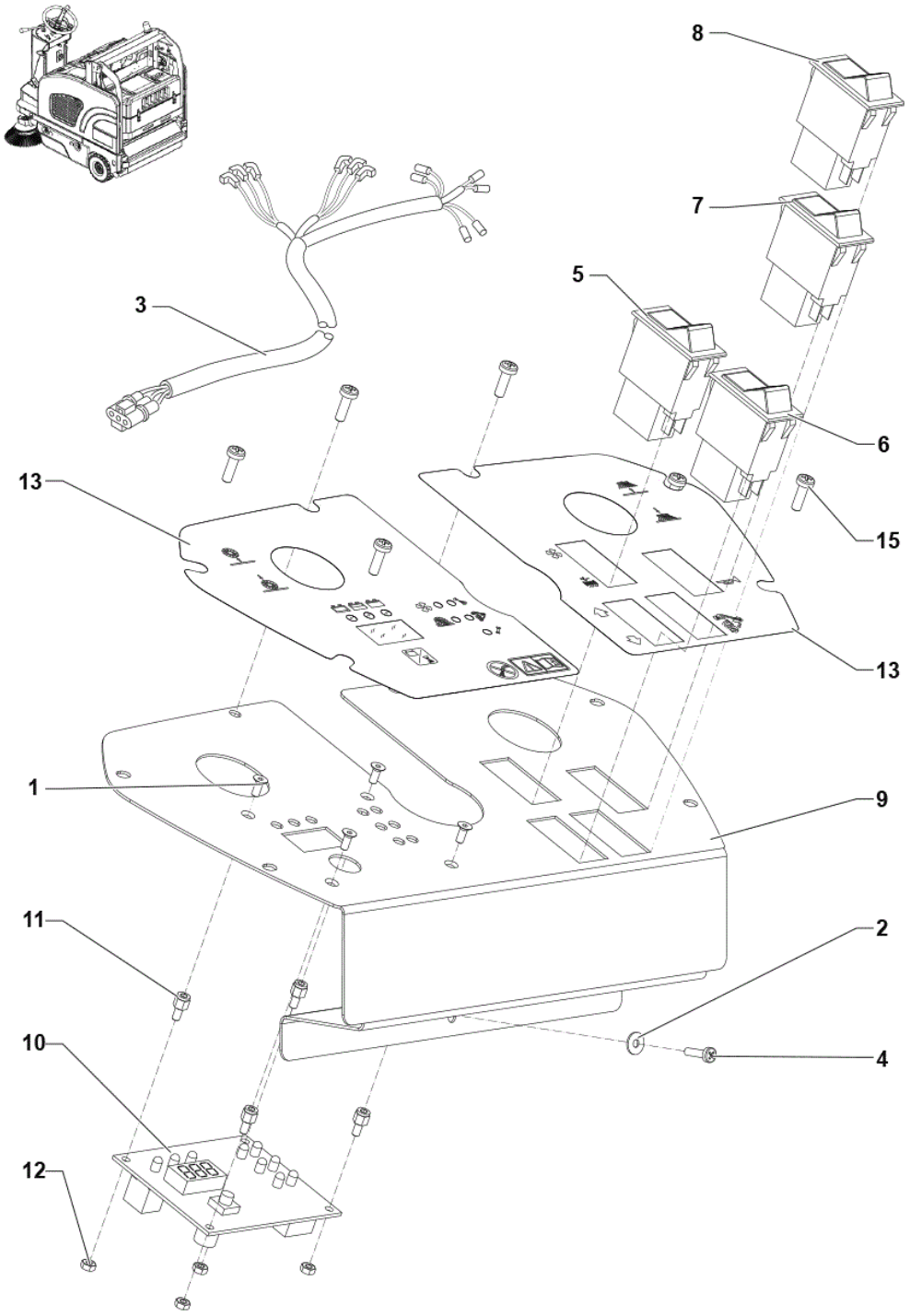
8
7
5
3
6
13
15
13
1
9
11
2
10
4
12

Pos.	Artikel-Nr.	Menge	Variante	Notes
1		4	K1	
2		1	K1	
3	1464340000	1	HARNESS CONTROL PANEL	
4		1	K1	
5	146 0846 000	1	Schalter f. SR1300H B	
6	1465400000	1	SWITCH FW RW KIT	
7	1465399000	1	SWITCH HOPPER LEAD KIT	
8	146 0845 000	1	Schalter	
9	1464179000	1	PANEL CONTROL MET.	
10	1467823000	1	CARD ELECTRONIC CONTROL PANEL SIP	
10	1467820000	1	CARD ELECTRONIC DISPLAY UPDATE KIT	[1]
11		4	K1	
12		4	K1	
13	1467759000	1	DECAL CONTROL PANEL BATTERY KIT	
15		6	K1	
K1	1465072000	1	HARDWARE FOR DISPLAY BOARD KIT	[2]

Part Notes:

[1] - Including decal
[2] - NOT SHOWN



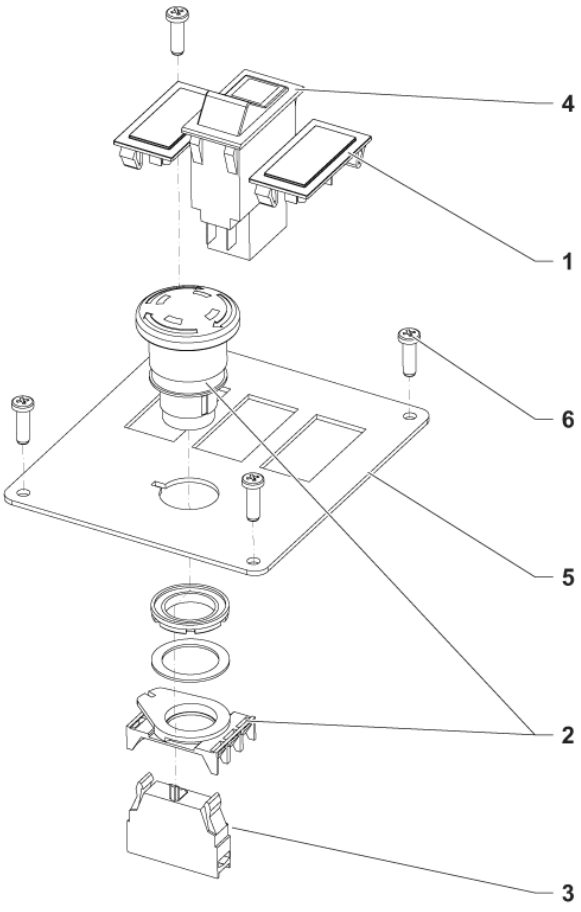
4
1
6
5
2
3

Pos.	Artikel-Nr.	Menge	Variante	Notes
1	146 1284 000	2	Abdeckkappe	
2	1466683000	1	Sicherheitsschalter	
3	146 1728 000	1	Kontakt	
4	1465398000	1	SWITCH HOPPER RAISING KIT	
5	1464411000	1	PLATE EMERGENCY SWITCH	
6	1465072000	4	HARDWARE FOR DISPLAY BOARD KIT	

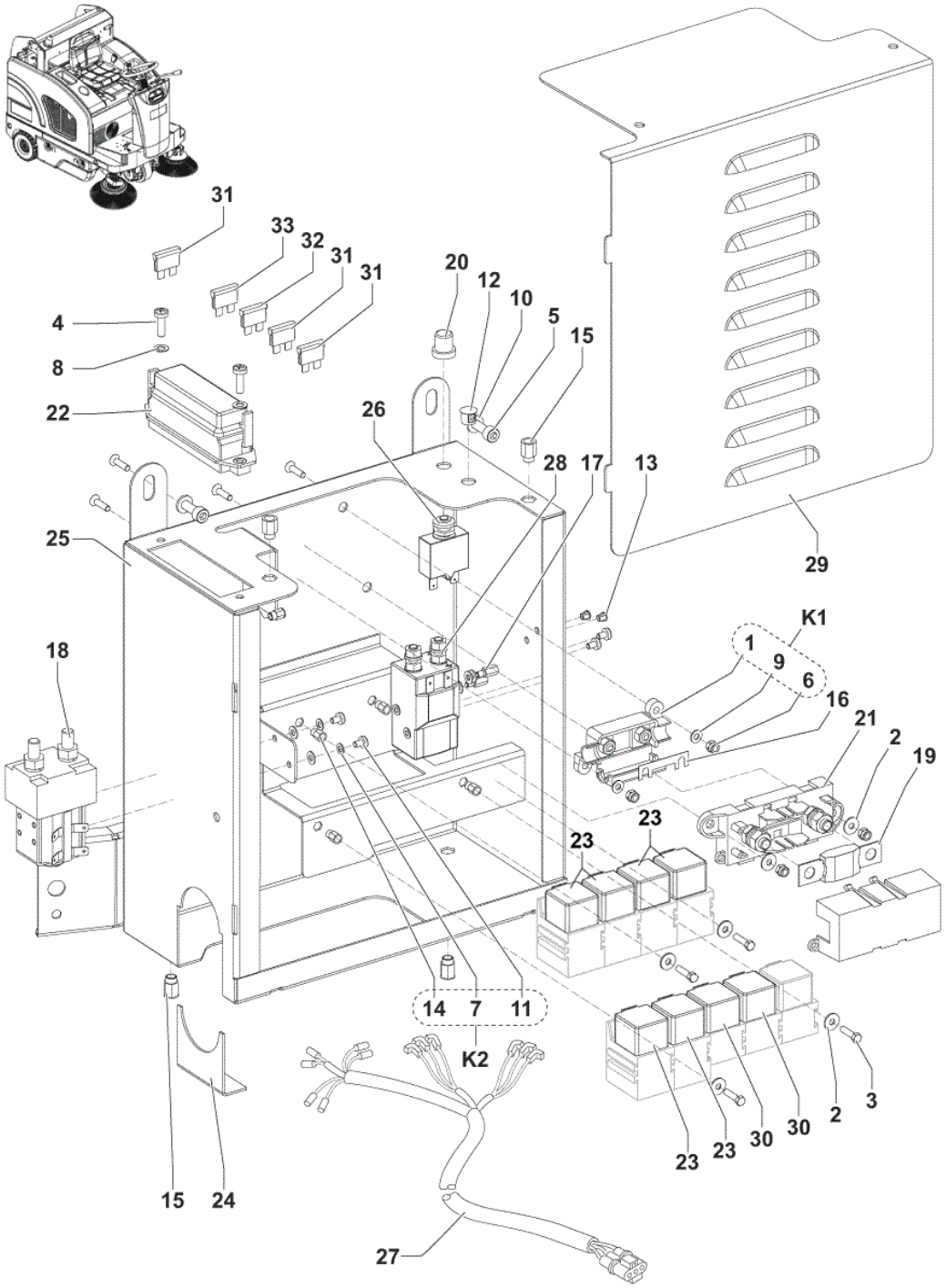
31
33
32
31
31
20
12
10
5
15
4
8
22
26
28
17
13
29
25
K1
1
9
6
16
21
2
19
18
23
23
14
7
11
K2
2
3
30
30
23
23
15
24
27

Pos.	Artikel-Nr.	Menge	Variante	Notes
1		1	K1	
2		6	K3	
3		4	K3	
4		2	K3	
5		2	K3	
6		4	K1	
7		4	K2	
8		2	K3	
9		8	K1	
10		2	K3	
11		4	K2	
12	145 4259 000	1	Kappe	
13	145 4271 000	2	CAP D. 6,4	
14		6	K2	
15		4	K3	
16	145 9854 000	1	Sicherung 50A	
17		2	K3	
18	1464982000	1	SWITCH ELECTROMAGNETIC 24V 120A	
19	146 0840 000	1	Sicherung 150A	
20	33017386	1	BOOT CIRCUIT BREAKER	
21	146 1169 000	1	Sicherungshalter	
22	146 1170 000	1	Sicherungsschalter SR1301	
23	909 6622 000	4	Relais 24 V 40 A	
24	1463923000	1	PLATE LOWER CLOSURE ELECTRIX BOX MET.	
25	1466974000	1	BOX ELECTRIC METAL BLACK SIP	
26	1464336000	1	Sicherungsautomat 15A	
27		1	K3	
28	9097208000	1	Relais	
29	1467600000	1	COVER ELECTRIC BOX MET. BLACK	
30	1464289000	2	Relais SR 1301 24V20/30A	[1]
31	145 8514 000	3	Sicherung 25A	
32	9100000878	1	FUSE BLADE 3A PKD	
33	1467034000	1	FUSE BLADE 10A PKD	
34	1466984000	1	GEARCASE HYDRAULIC POWER SUPPLY KIT	[2]
K1	1465073000	1	HOLDER FUSE KIT	
K2	1465074000	1	HARDWARE CONTACTOR KIT	
K3	1466979000	1	BOX ELECTRIC CPL BATTERY VERSION SIP	[3]

Part Notes:

[1] - TSB-FC-2017-024 hopper relay SW4000
[2] - NOT SHOWN - SEE INST. INSTR. 1466982000
[3] - NOT SHOWN

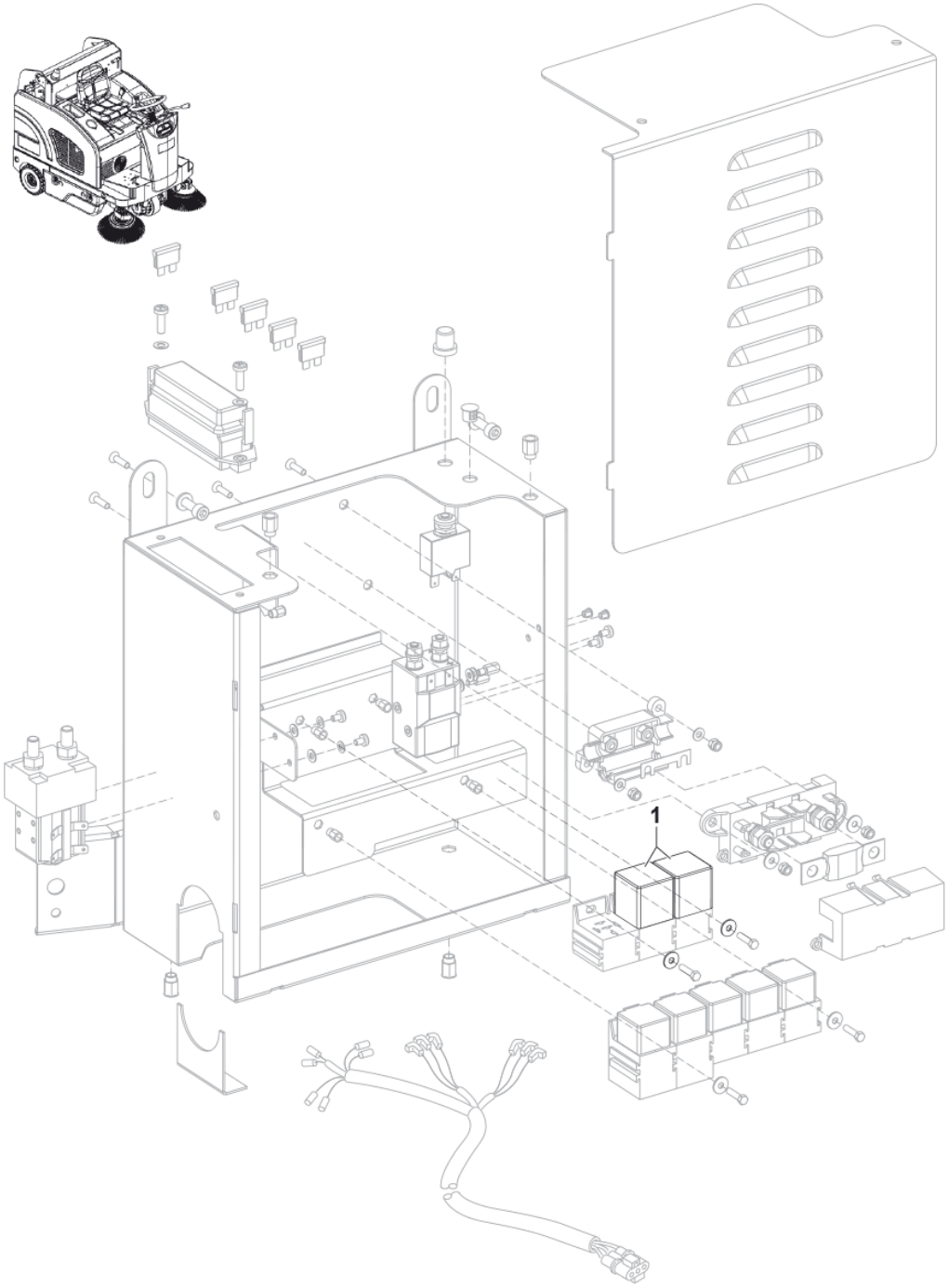
1

Pos.	Artikel-Nr.	Menge	Variante	Notes
1	1466984000	1	GEARCASE HYDRAULIC POWER SUPPLY KIT	[1]

Part Notes:

[1] - SEE INST. INTR. 1466982000
See TSB-FC-2017-024

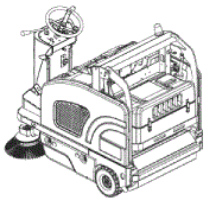

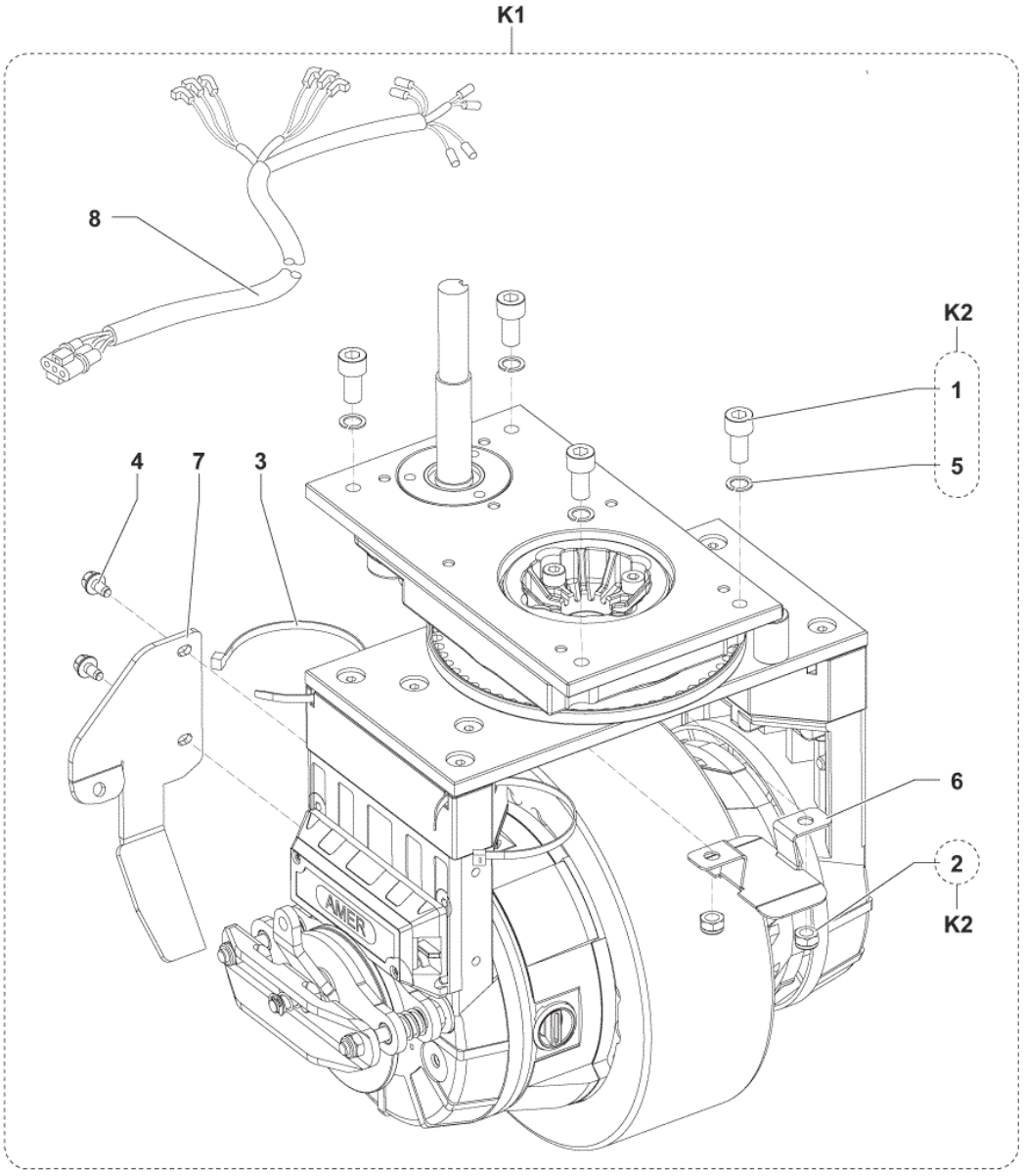
K1
8
K2
1
5
4
7
3
6
2
K2
AMER

Pos.	Artikel-Nr.	Menge	Variante	Notes
1		4	K2	
2		2	K2	
3		6	K1	
4		2	K1	
5		4	K2	
6	1464600000	1	CASING TRACTION WHEEL HARNESS PROTECTION	
7	1465342000	1	BRACKET BRAKE CABLE	
8	1467455000	1	HARNESS TRACTION WHEEL KIT	[1]
8	1467712000	1	HARNESS TRACTION WHEEL US KIT	[2]
K1	1464913000	1	ANTRIEBSRAD KOMPLETT	[1]
K1	1467710000	1	MOTORWHEEL US KIT	[2]
K1	1465170000	1	WHEEL TRACTION NON MARKING KIT	[3]
K2	1465045000	1	HARDWARE STEERING SYSTEM FIXING KIT	

Part Notes:

[1] - EU VERSION ONLY
[2] - US VERSION ONLY
[3] - OPTIONAL

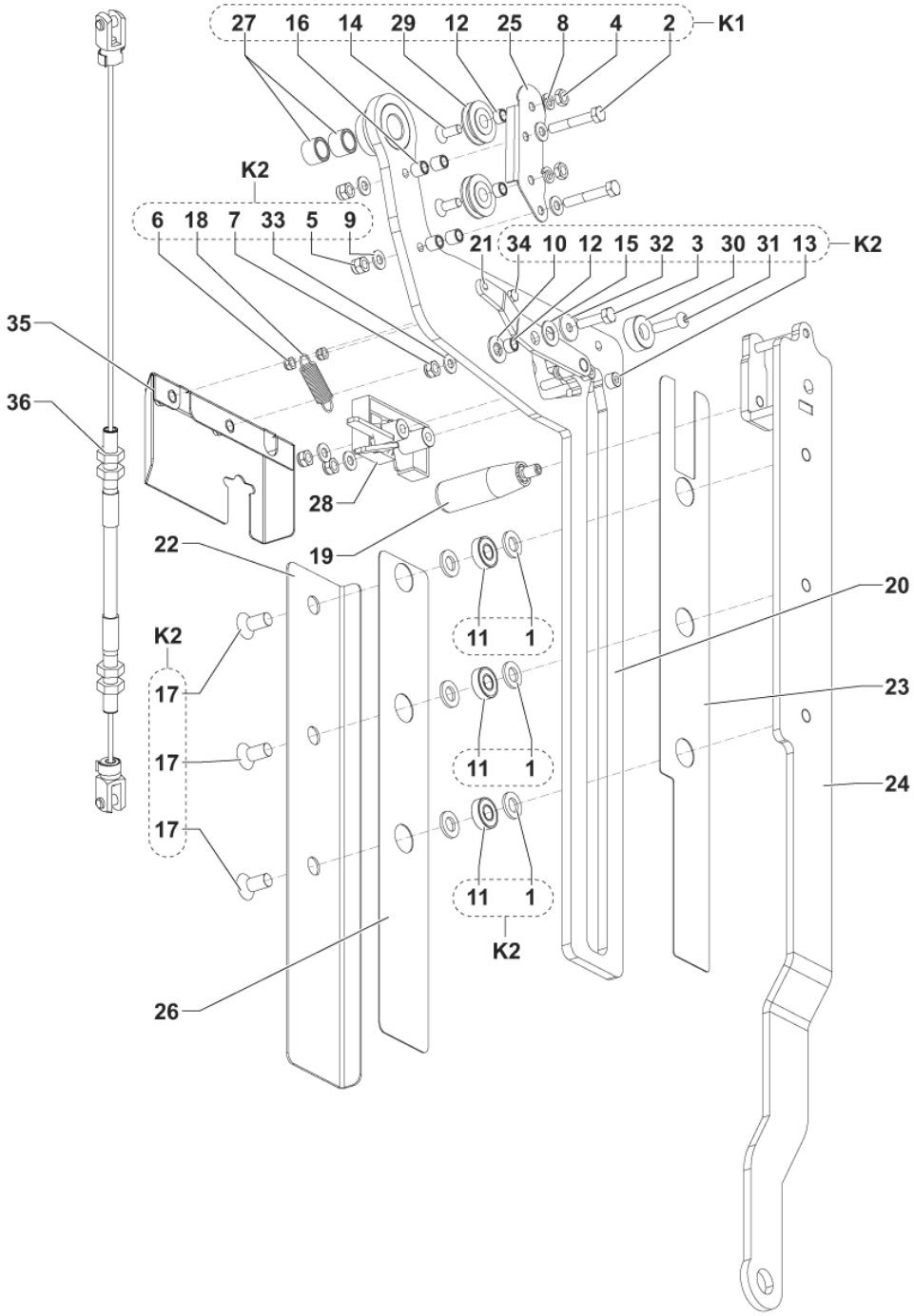
27 16 14 29 12 25 8 4 2 K1
K2
6 18 7 33 5 9
21 34 10 12 15 32 3 30 31 13 K2
35
36
28
22
19
20
K2
17
17
17
11 1
11 1
11 1
K2
23
24
26

Pos.	Artikel-Nr.	Menge	Variante	Notes
1		6	K2	
2		2	K1	
3		1	K2	
4		2	K1	
5		2	K2	
6		2	K2	
7		4	K2	
8		2	K1	
9		7	K2	
10		1	K2	
11	44905699	3	BEARING BALL 6001 2RS PKD	
12		3	K1-K2	
13		2	K2	
14		2	K1	
15		1	K2	
16		4	K1	
17		3	K2	
18	1467039000	1	FEDERZUG AUS KOHLENSTOFFSTAHL SIP	
19	1464792000	1	HANDLE REVOLVING	
20	1465261000	1	ARM GUIDE	
21	1465262000	1	LEVER FOR LOCK RELEASE	
22	1465266000	1	PROTECTION EXTERNAL	
23	1465268000	1	PLATE PLASTIC ANTIABRASIVE	
24	1465269000	1	ARM TELESCOPIC	
25		1	K1	
26	1465276000	1	PLATE PLASTIC ANTIABRASIVE	
27	1465281000	2	BEARING SLEEVE IGLIDUR MSM-1622-15	
28	1465282000	1	LATCH SLAM	
29	1465288000	2	PULLEY PLASTIC D.38	
30	1465289000	1	SPACER PLASTIC	
31		1	K2	
32		1	K2	
33		1	K2	
34		1	K2	
35	1465388000	1	PROTECTION FOR LATCH KIT	
36	1465273000	1	CABLE LOCK RELEASE	
K1	1465032000	1	LEVER CONTAINER RELEASE FIXING KIT	
K2	1465033000	1	LEVER PIVOT FIXING KIT	

K1

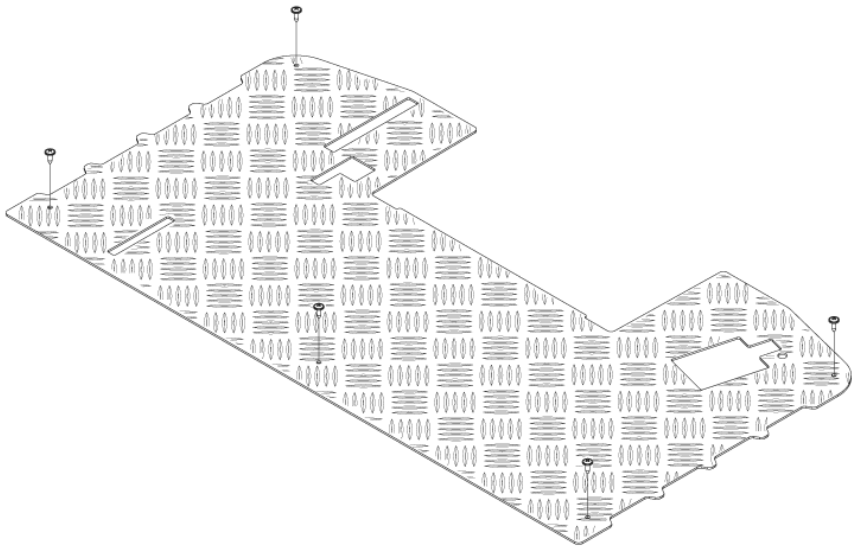

K2

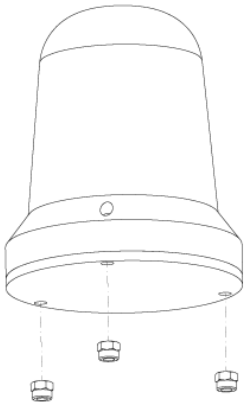

Pos.	Artikel-Nr.	Menge	Variante	Notes
K1	1464957000	1	Fußboden Matte	[1]
K2	1464948000	1	Warnleuchte	[2]

Part Notes:

[1] - OPTIONAL

[2] - OPTIONAL - INSTALLATION INSTRUCTION REF. 1465248000

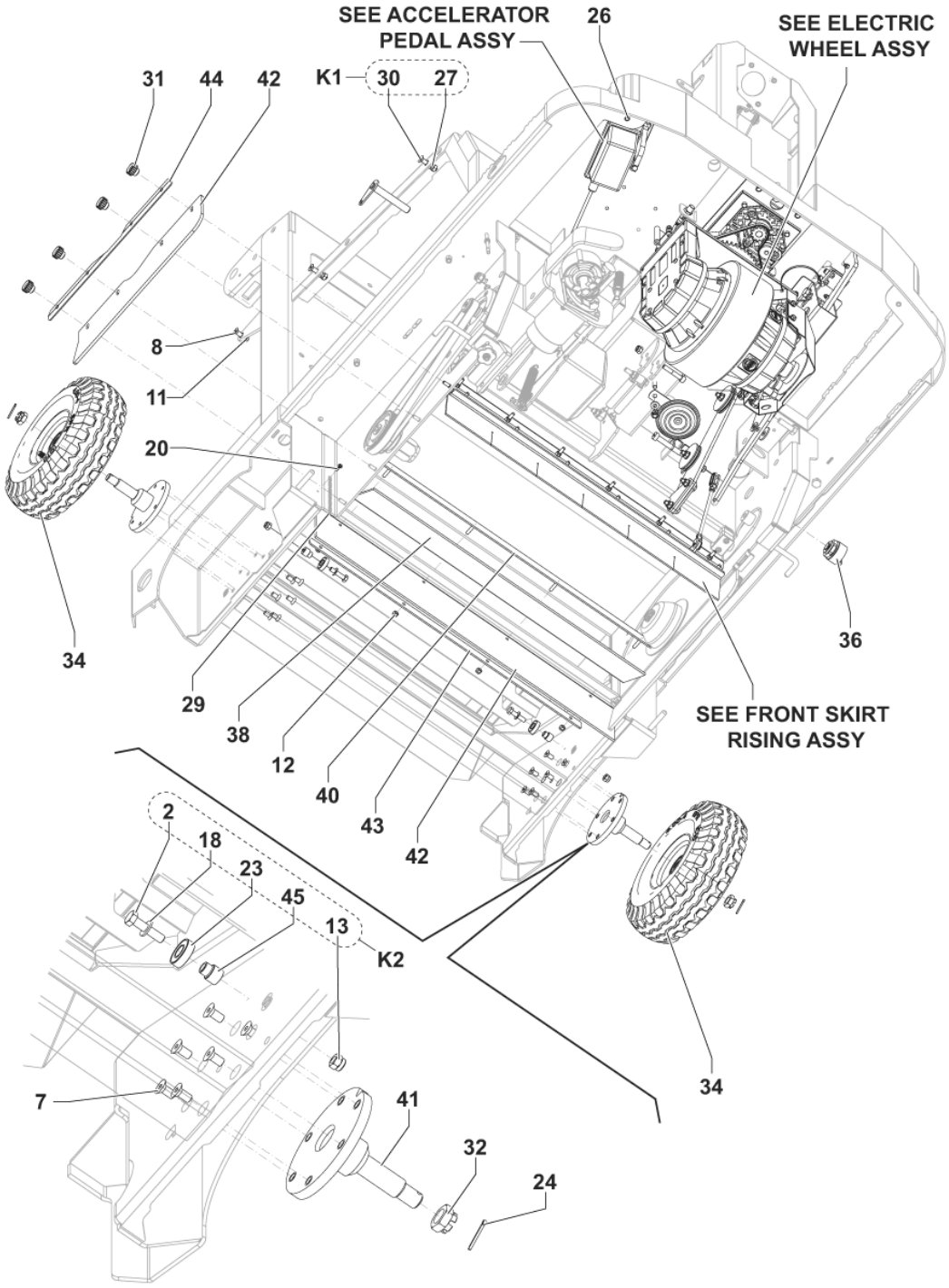
SEE ACCELERATOR PEDAL ASSY
26
SEE ELECTRIC WHEEL ASSY
31
44
42
K1
30
27
8
11
20
34
36
29
38
12
40
43
42
SEE FRONT SKIRT RISING ASSY
2
18
23
45
13
K2
34
7
41
32
24

Pos.	Artikel-Nr.	Menge	Variante	Notes
1		1	K5	
2		2	K2	
3		1	K5	
4		7	K3	
5		1	K4	
6	33004370	1	SCREW M8X45 CAP HD HEX SOCK ISO4762	
7	33004590	12	SCREW M8X16 C/SUNK FLAT HD HEX ISO10642	
8	33004593	2	SCREW M8X25 C/SUNK FLAT HD HEX ISO10642	
9		1	K4	
10		7	K3	
11		6	K1	
12	33023469	1	NUT LOCK HEX M6 ISO7040 10 PCS SET	
13		5	K2	
14		1	K5	
15	33023667	1	NUT LOCK HEX M6 LOW ISO10511 5 PCS SET	
16		7	K3	
17	33023396	1	WASHER PLAIN M6X12 ISO7089 10 PCS SET	
18		6	K2	
19		2	K5	
20		1	K1	
21		7	K3	
22	1468013000	2	SENSOR BACK UP PROXIMITY	
23		2	K2	
24	33005791	2	PIN SPLIT 4X45 UNI1336	
25		18	K4	
26	145 4772 000	12	Beilagscheibe M6	
27		16	K1	
28	1467032000	1	HORN 24V 112DB SIP	
29	146 0611 000	1	Kette	
30		4	K1	
31	1466374000	4	KNOB KNURLED M6 FEMALE PKD	
32	1464841000	3	NUT HEX M16 CASTLE LOW DIN937	
33		1	K5	
34	1467888000	2	WHEEL SOLID 4.00-4 BLACK SET	
34	146 0329 000	2	Antriebsrad, vorne, n. mark.	[1]
34	1465313000	1	Vollgummi-Räder-Set, hinten, n. mark.	[1]
35	1464847000	2	ER D.6.2X14 H.60 PLASTIC	
36	909 6126 000	1	Warnton	
37	1464469000	1	COVER MET. GREY CENTRAL TUNNEL	
38	1464275000	1	SKIRT REAR RECYCLE	
39	1463931000	2	LEVER BROOM DOOR FIXING PLAST.	
40	1464276000	1	PLATE REAR SKIRT FIXING	
41	1464171000	3	SUPPORT REAR WHEEL	
42	1465396000	1	SCHÜRZE KOMPLETT	
42	1464951000	1	Seitenschürzen	[1]
43	1464277000	1	PLATE REAR SKIRT	
44	1464278000	1	PLATE SIDE KIRT FIXING	
45		2	K2	
K1	1465036000	1	HARDWARE FOR SIDE COVER KIT	
K2	1465037000	1	PIN HOPPER BEARING KIT	
K3	1465038000	1	HARDWARE FOR PIVOT LATERAL COVER KIT	
K4	1465039000	1	HARDWARE FOR ACCELERATOR ADJUSTMENT KIT	
K5	1465040000	1	HARDWARE FRONT FLAP KIT	

Part Notes:

[1] - OPTIONAL

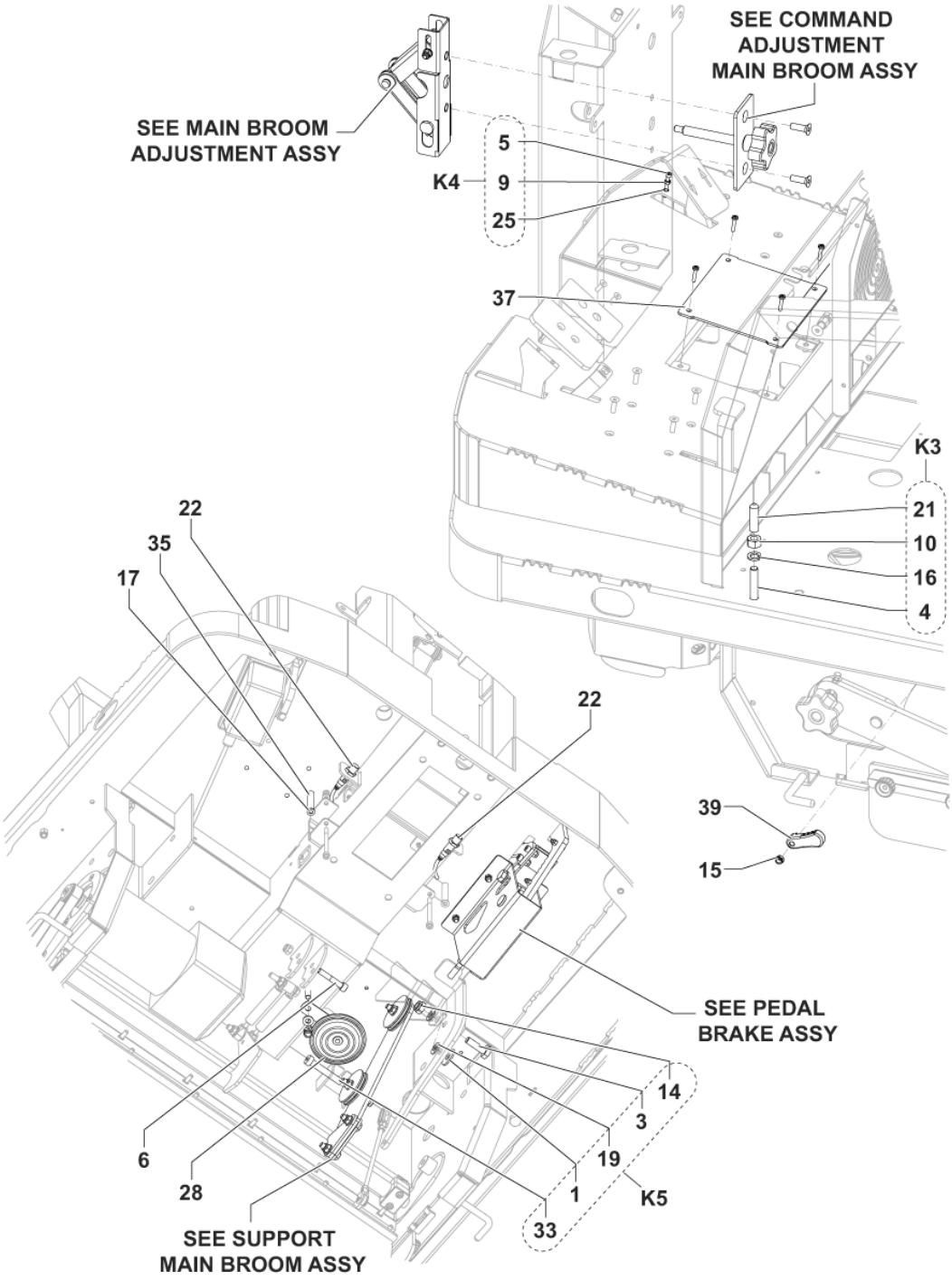
SEE COMMAND
ADJUSTMENT
MAIN BROOM ASSY
SEE MAIN BROOM
ADJUSTMENT ASSY
5
K4
9
25
37
K3
21
10
16
4
22
35
17
22
39
15
SEE PEDAL
BRAKE ASSY
14
3
19
1
K5
33
6
28
SEE SUPPORT
MAIN BROOM ASSY

Pos.	Artikel-Nr.	Menge	Variante	Notes
1		1	K5	
2		2	K2	
3		1	K5	
4		7	K3	
5		1	K4	
6	33004370	1	SCREW M8X45 CAP HD HEX SOCK ISO4762	
7	33004590	12	SCREW M8X16 C/SUNK FLAT HD HEX ISO10642	
8	33004593	2	SCREW M8X25 C/SUNK FLAT HD HEX ISO10642	
9		1	K4	
10		7	K3	
11		6	K1	
12	33023469	1	NUT LOCK HEX M6 ISO7040 10 PCS SET	
13		5	K2	
14		1	K5	
15	33023667	1	NUT LOCK HEX M6 LOW ISO10511 5 PCS SET	
16		7	K3	
17	33023396	1	WASHER PLAIN M6X12 ISO7089 10 PCS SET	
18		6	K2	
19		2	K5	
20		1	K1	
21		7	K3	
22	1468013000	2	SENSOR BACK UP PROXIMITY	
23		2	K2	
24	33005791	2	PIN SPLIT 4X45 UNI1336	
25		18	K4	
26	145 4772 000	12	Beilagscheibe M6	
27		16	K1	
28	1467032000	1	HORN 24V 112DB SIP	
29	146 0611 000	1	Kette	
30		4	K1	
31	1466374000	4	KNOB KNURLED M6 FEMALE PKD	
32	1464841000	3	NUT HEX M16 CASTLE LOW DIN937	
33		1	K5	
34	1467888000	2	WHEEL SOLID 4.00-4 BLACK SET	
34	146 0329 000	2	Antriebsrad, vorne, n. mark.	[1]
34	1465313000	1	Vollgummi-Räder-Set, hinten, n. mark.	[1]
35	1464847000	2	ER D.6.2X14 H.60 PLASTIC	
36	909 6126 000	1	Warnton	
37	1464469000	1	COVER MET. GREY CENTRAL TUNNEL	
38	1464275000	1	SKIRT REAR RECYCLE	
39	1463931000	2	LEVER BROOM DOOR FIXING PLAST.	
40	1464276000	1	PLATE REAR SKIRT FIXING	
41	1464171000	3	SUPPORT REAR WHEEL	
42	1465396000	1	SCHÜRZE KOMPLETT	
42	1464951000	1	Seitenschürzen	[1]
43	1464277000	1	PLATE REAR SKIRT	
44	1464278000	1	PLATE SIDE KIRT FIXING	
45		2	K2	
K1	1465036000	1	HARDWARE FOR SIDE COVER KIT	
K2	1465037000	1	PIN HOPPER BEARING KIT	
K3	1465038000	1	HARDWARE FOR PIVOT LATERAL COVER KIT	
K4	1465039000	1	HARDWARE FOR ACCELERATOR ADJUSTMENT KIT	
K5	1465040000	1	HARDWARE FRONT FLAP KIT	

Part Notes:

[1] - OPTIONAL

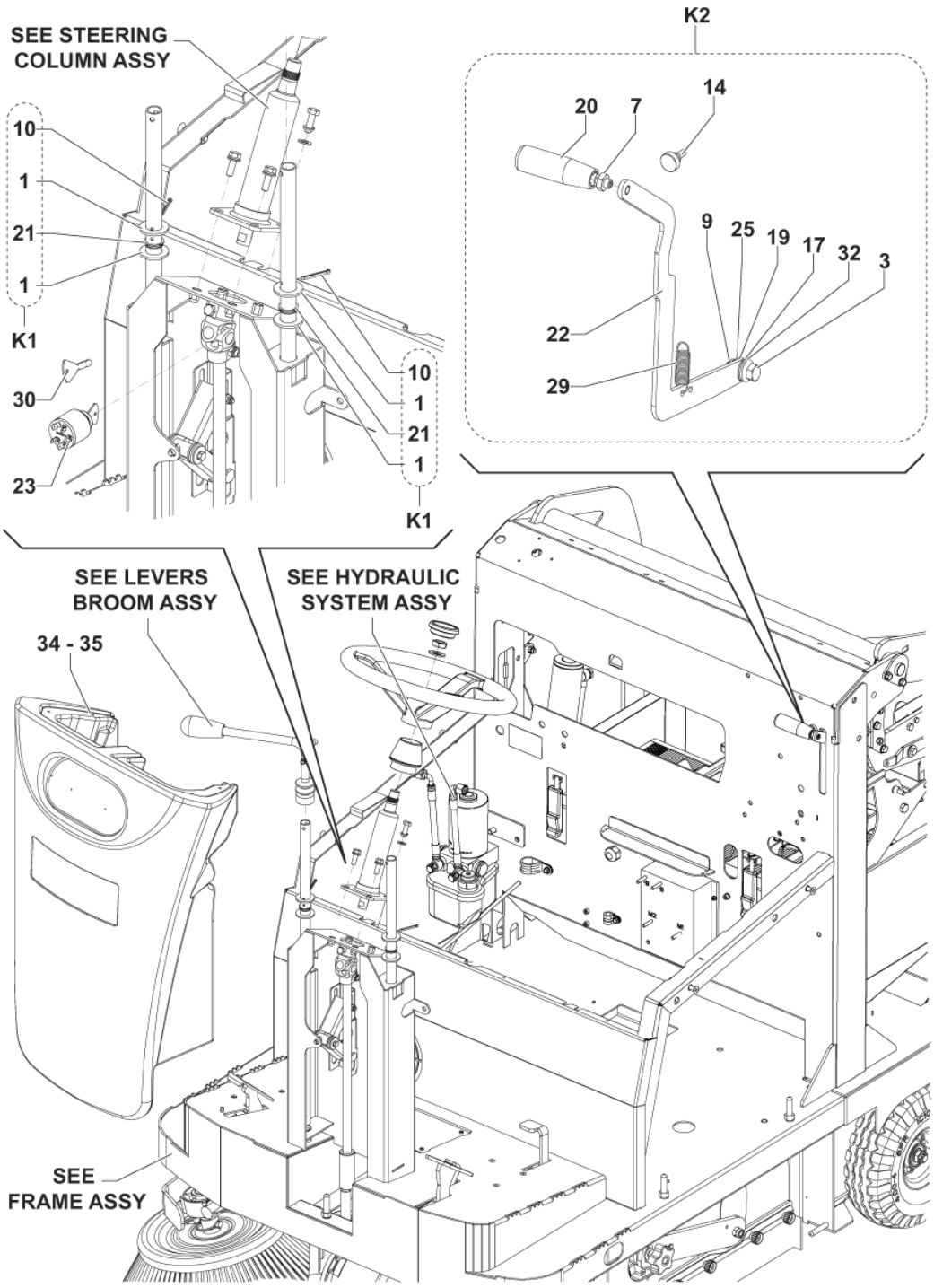
SEE STEERING COLUMN ASSY
10
1
21
1
K1
30
23
10
1
21
1
K1
K2
20
7
14
9
25
19
17
32
3
22
29
SEE LEVERS BROOM ASSY
34 - 35
SEE HYDRAULIC SYSTEM ASSY
SEE FRAME ASSY

Pos.	Artikel-Nr.	Menge	Variante	Notes
1		4	K1	
2		2	K4	
3		1	K2	
4		1	K4	
5		1	K4	
6		1	K4	
7		1	K2	
8		1	K4	
9		1	K2	
10		4	K1	
11		1	K3	
12		1	K4	
13		1	K3	
14		1	K2	
15		1	K4	
16	1468013000	1	SENSOR BACK UP PROXIMITY	
17		1	K2	
18	1465286000	1	COVER PLATE MET.	
19		1	K2	
20		1	K2	
21		3	K1	
22		1	K2	
23	33020442	1	Schlüsselschalter	
24		2	K3	
25		1	K2	
26		1	K3	
27		1	K3	
28		1	K3	
29	1467039000	1	FEDERZUG AUS KOHLENSTOFFSTAHL SIP	
30	1467014000	1	KEY F STARTER SWITCH 2 PCS SET	
31		1	K3	
32		3	K2	
33		1	K3	
34	1464178000	1	COVER FRONT PLAST. GREY	
35	1464598000	1	TANK WATER	[1]
K1	1465031000	1	HARDWARE LEVERS BROOM KIT	
K2	1464915000	1	LEVER FOR HOPPER RELEASE KIT	
K3	1465034000	1	HARDWARE RELEASE MAIN LEVER KIT	
K4	1465035000	1	HARDWARE FOR TELESCOPIC ARM KIT	

Part Notes:

[1] - OPTIONAL

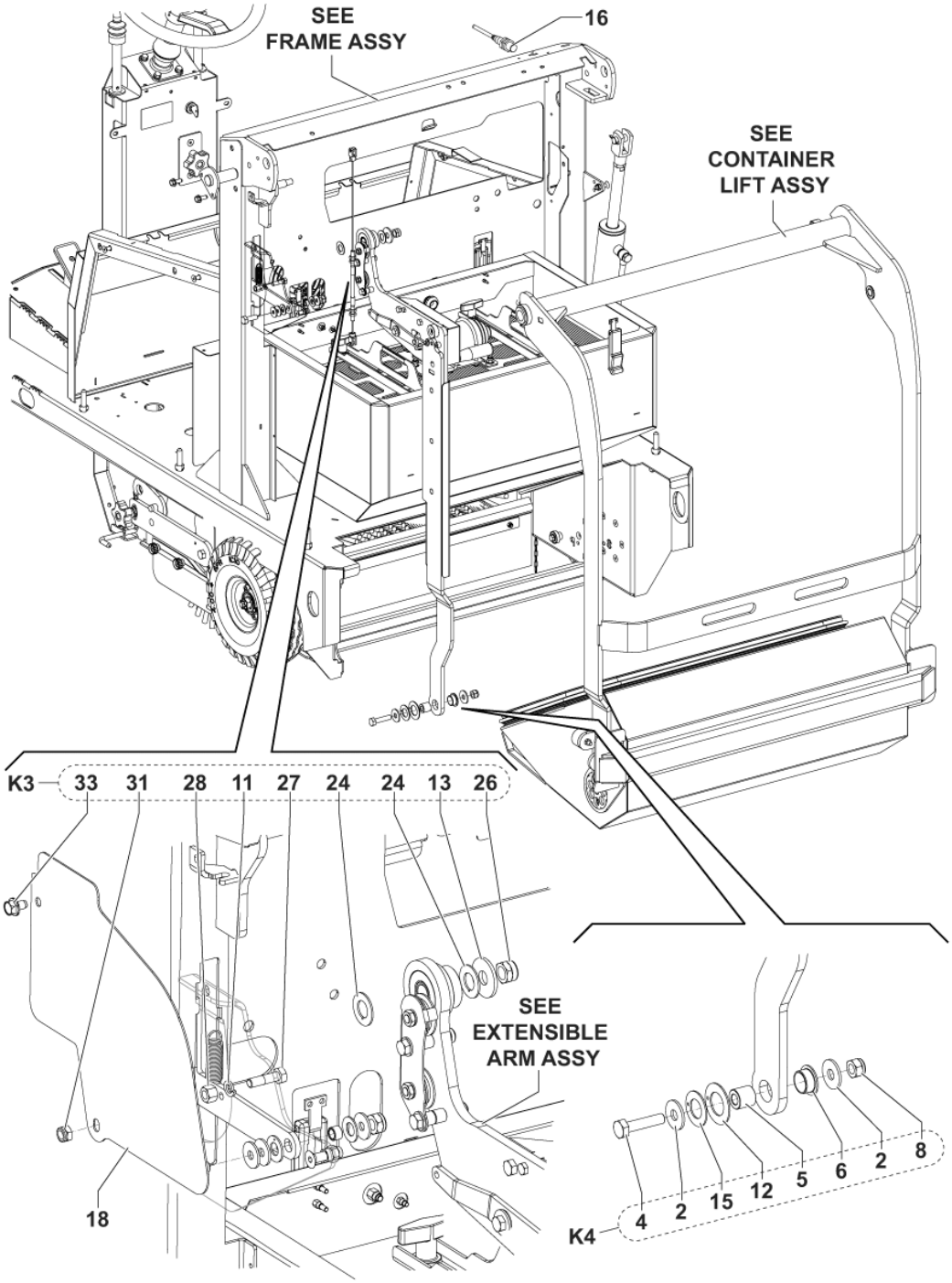
SEE
FRAME ASSY
16
SEE
CONTAINER
LIFT ASSY
K3
33
31
28
11
27
24
24
13
26
SEE
EXTENSIBLE
ARM ASSY
18
K4
4
2
15
12
5
6
2
8

Pos.	Artikel-Nr.	Menge	Variante	Notes
1		4	K1	
2		2	K4	
3		1	K2	
4		1	K4	
5		1	K4	
6		1	K4	
7		1	K2	
8		1	K4	
9		1	K2	
10		4	K1	
11		1	K3	
12		1	K4	
13		1	K3	
14		1	K2	
15		1	K4	
16	1468013000	1	SENSOR BACK UP PROXIMITY	
17		1	K2	
18	1465286000	1	COVER PLATE MET.	
19		1	K2	
20		1	K2	
21		3	K1	
22		1	K2	
23	33020442	1	Schlüsselschalter	
24		2	K3	
25		1	K2	
26		1	K3	
27		1	K3	
28		1	K3	
29	1467039000	1	FEDERZUG AUS KOHLENSTOFFSTAHL SIP	
30	1467014000	1	KEY F STARTER SWITCH 2 PCS SET	
31		1	K3	
32		3	K2	
33		1	K3	
34	1464178000	1	COVER FRONT PLAST. GREY	
35	1464598000	1	TANK WATER	
K1	1465031000	1	HARDWARE LEVERS BROOM KIT	
K2	1464915000	1	LEVER FOR HOPPER RELEASE KIT	
K3	1465034000	1	HARDWARE RELEASE MAIN LEVER KIT	
K4	1465035000	1	HARDWARE FOR TELESCOPIC ARM KIT	

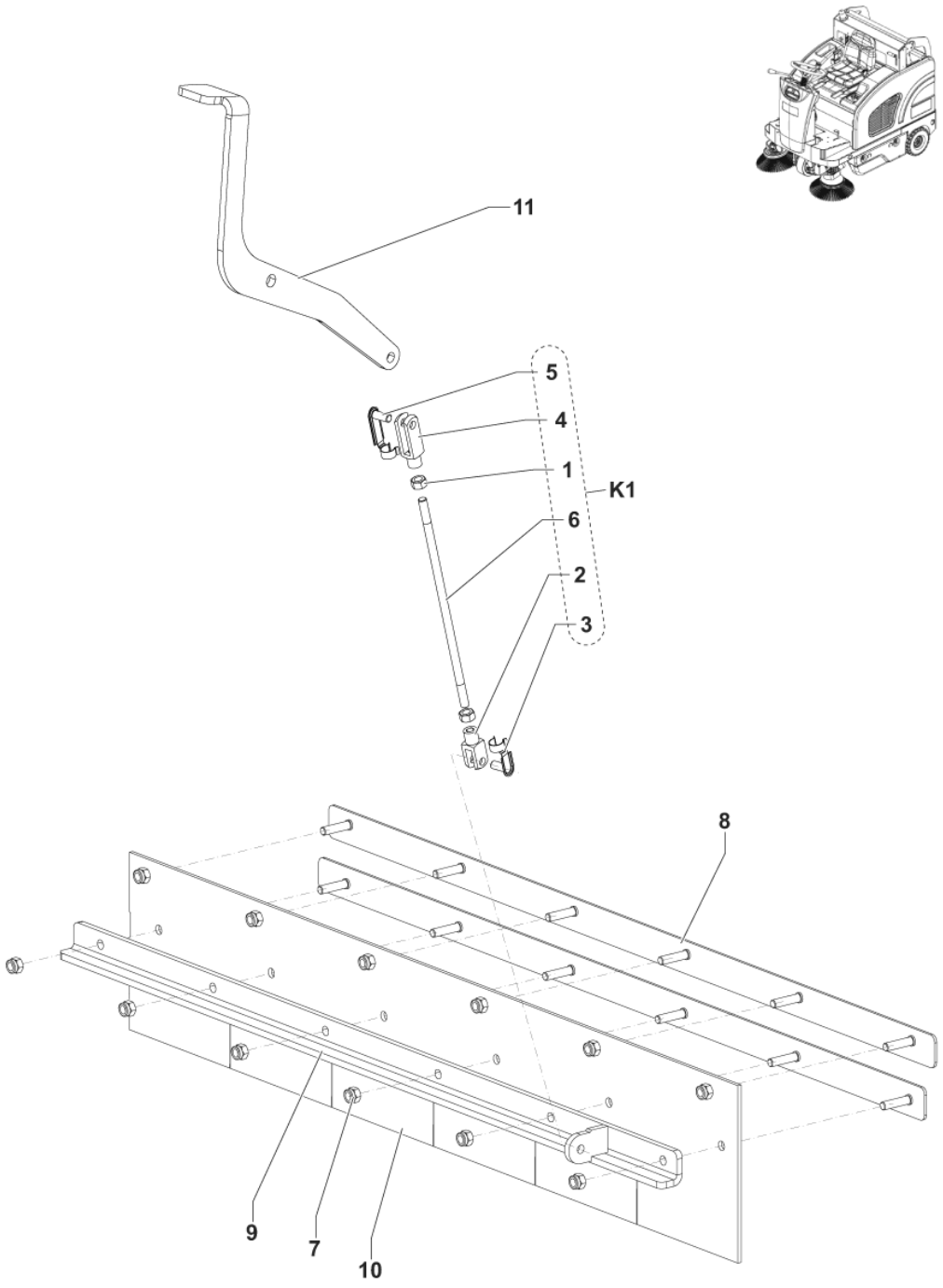
11
5
4
1
K1
6
2
3
8
9
7
10

Pos.	Artikel-Nr.	Menge	Variante	Notes
1		2	K1	
2		1	K1	
3		1	K1	
4		1	K1	
5		1	K1	
6		1	K1	
7	33023469	2	NUT LOCK HEX M6 ISO7040 10 PCS SET	
8	1463916000	2	PLATE FRONT SKIRT	
9	1464337000	1	FLAP METAL FRONT	
10	1464497000	1	VORD. SCHÜRZE	
11	1464185000	1	PEDAL DEVICE SKIRT RISING	
K1	1464921000	1	ROD FOR FLAP KIT	



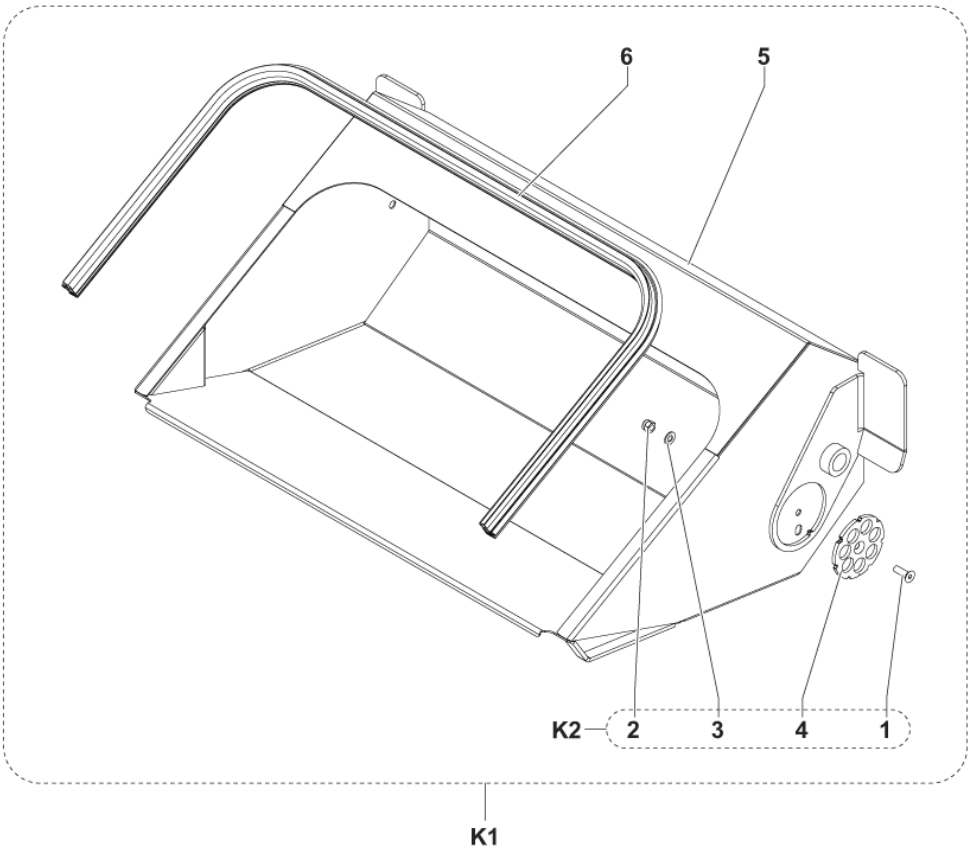
6
5
K2
2
3
4
1
K1

Pos.	Artikel-Nr.	Menge	Variante	Notes
1		1	K2	
2		1	K2	
3		1	K2	
4		1	K2	
5		1	K1	
6	1464535000	1	GASKET RUBBER L.1430MM PKD	
K1	1464917000	1	HOPPER WASTE KIT	
K2	1465065000	1	FLANGE HOPPER SETTING KIT	

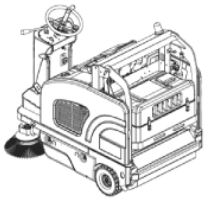

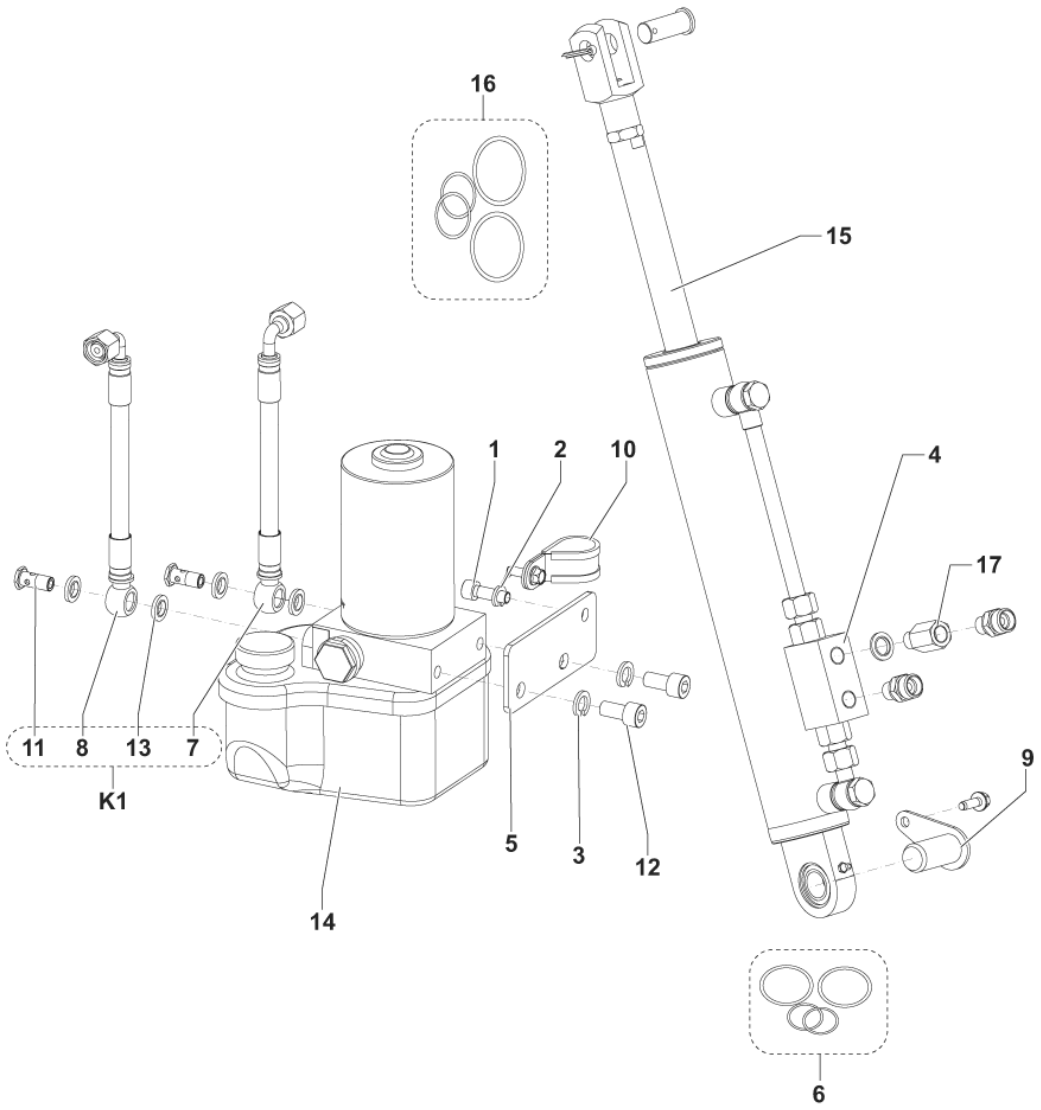
16
15
1
2
10
4
17
11
8
13
7
K1
9
5
3
12
14
6

Pos.	Artikel-Nr.	Menge	Variante	Notes
1	33004366	1	Schraube M8X25 UNI5931	
2	33023223	1	U-Scheibe M8 UNI1751B 10 Stck.	
3	33005843	2	Dichtungsring M10	
4	1467054000	1	VALVE BLOCK SIP	
5	1464233000	1	BRACKET FOR HYDRAULIC UNIT	
6	1465095000	1	GASKETS FOR PISTON KIT	[1]
7		1	K1	
8		1	K1	
9	1464247000	1	PIN LOWER CILYNDER PHOS.	
10	33020367	1	CLAMP HOSE D.25	
11		2	K1	
12	145 5742 000	2	Schraube	
13		4	K1	
14	1465177000	1	GEARCASE HYDRAULIC 12V-24V	
15	1464920000	1	CYLINDER KIT	
16	1465096000	1	GASKETS FOR CYLINDER HEAD KIT	[1]
17	1465097000	1	CYLINDER FIXING KIT	
K1	1464919000	1	HOSES HYDRAULIC WITH HARDWARE KIT	

Part Notes:

[1] - STOCK COVERS GUARANTEE

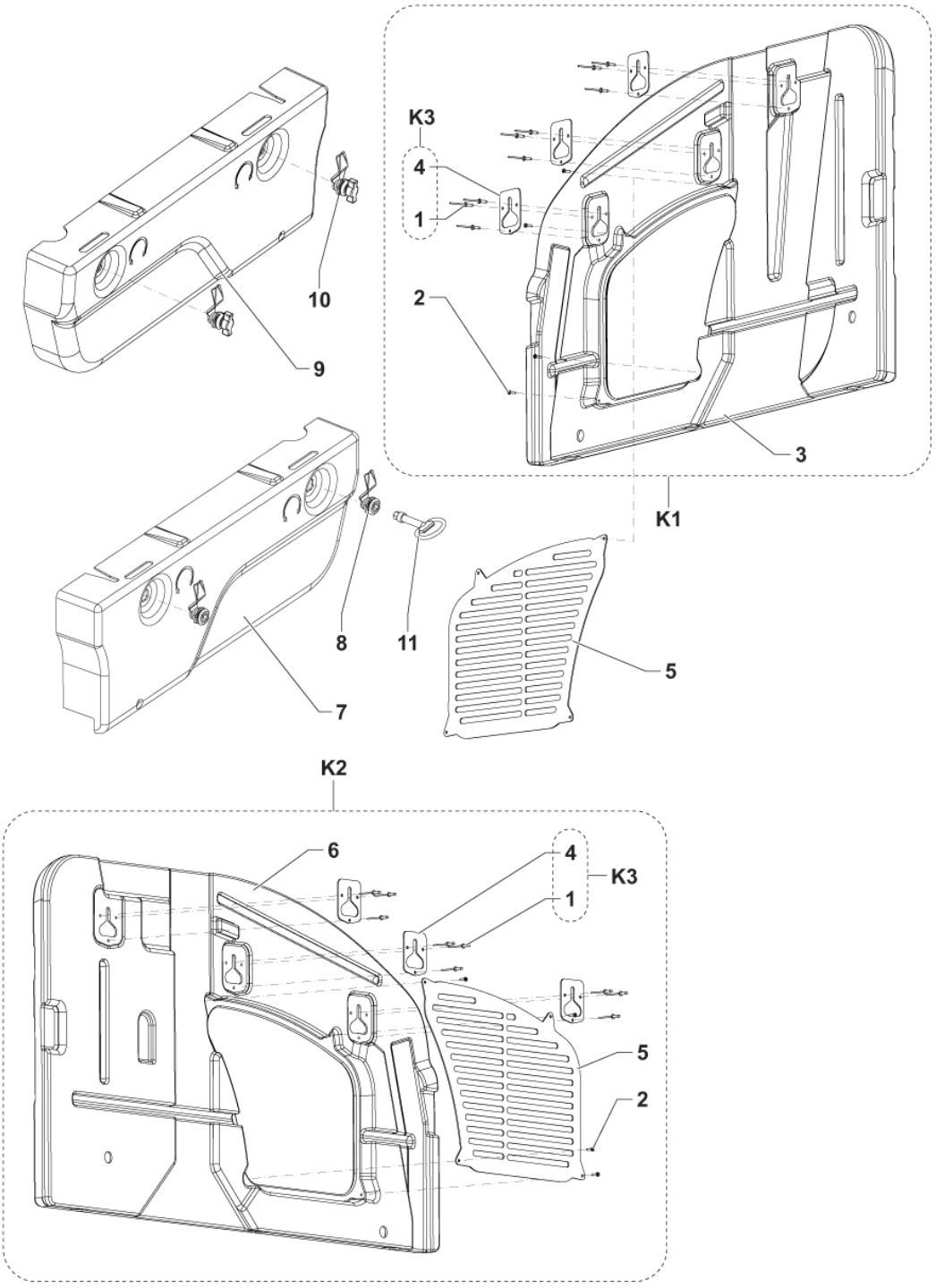
K3
4
1
2
3
K1
10
9
8
11
7
5
K2
6
4
K3
1
5
2

Pos.	Artikel-Nr.	Menge	Variante	Notes
1		18	K3	
2		8	K1-K2	
3		1	K1	
4		6	K3	
5	1464354000	2	GRID VENTING MET.	
6		1	K2	
7	1464191000	1	HATCH RIGHT SIDE	
8	1467109000	2	LOCK WITH KEY FOR HATCH PKD	
9	1464192000	1	HATCH LEFT SIDE	
10	1467041000	4	LOCK PKD	
11	1467057000	1	KEY HEX 10MM MALE PKD	
K1	1464925000	1	COVER RIGHT KIT	
K2	1464923000	1	COVER LEFT KIT	
K3	1465044000	1	PLATE FOR PANEL FIXING KIT	

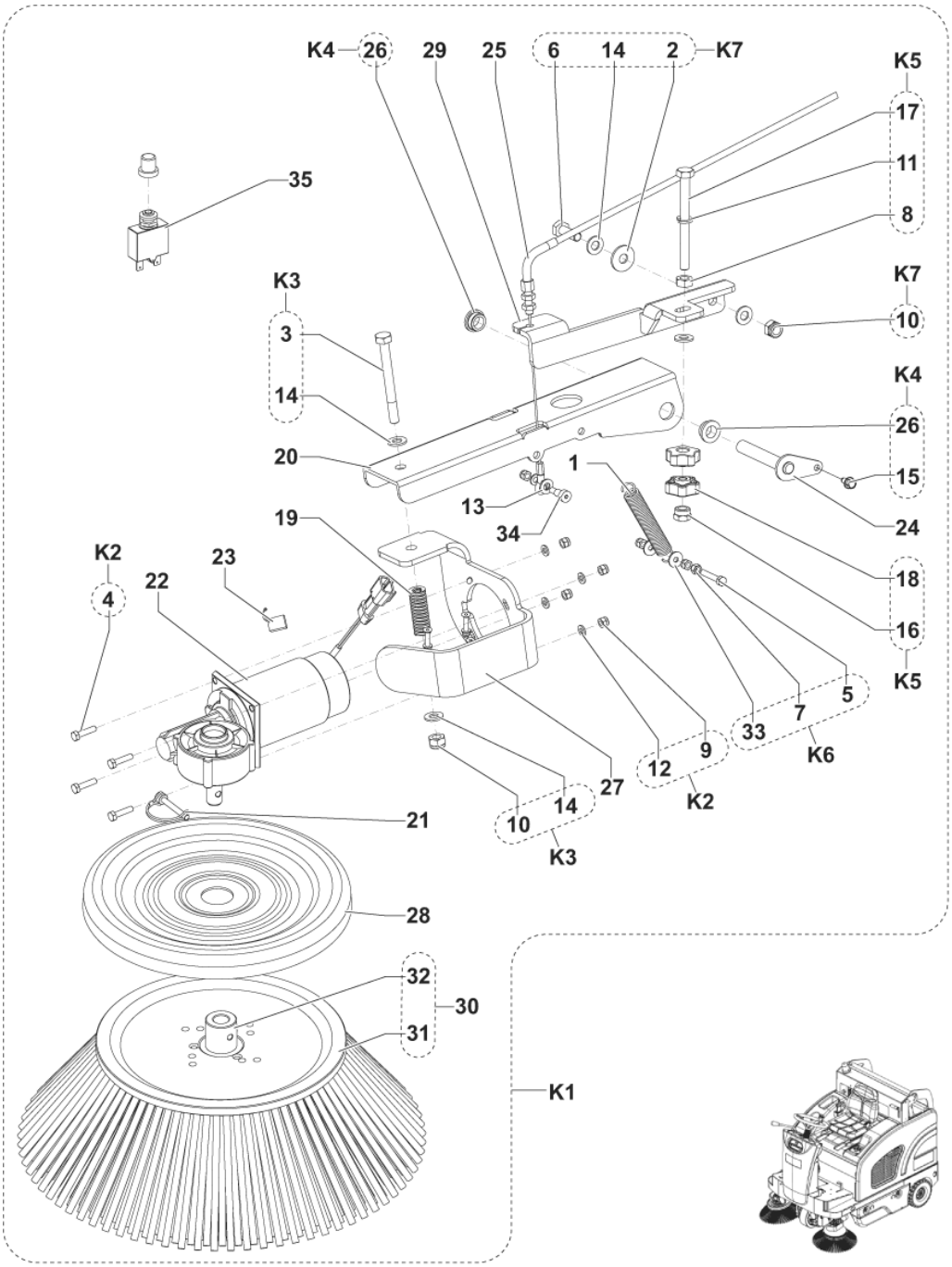
K4
26
29
25
6
14
2
K7
K5
17
11
8
35
K3
3
14
K7
10
K4
26
20
1
15
13
34
24
19
18
K2
4
22
23
16
K5
5
7
33
K6
12
9
K2
27
10
14
K3
21
28
32
30
31
K1

Pos.	Artikel-Nr.	Menge	Variante	Notes
1	146 0986 000	1	SPRING	
2		1	K7	
3		1	K3	
4		4	K2	
5		1	K6	
6		1	K7	
7		1	K6	
8		1	K5	
9		7	K2	
10		2	K3-K7	
11		1	K5	
12		5	K2	
13	33023208	1	WASHER M8 UNI6592 10 PCS SET	
14		5	K3-K7	
15		1	K4	
16		1	K5	
17		1	K5	
18		2	K5	
19	146 1317 000	1	Feder SR 1500 HD	
20	1463903000	1	LEVER SIDE BROOM LIFTING	
21	1463960000	1	Bolzen zu Halterung Seitenbürste	
22	1464242000	1	GEARMOTOR LEFT SIDE BROOM	
23	1467083000	1	CARBON BRUSH 2 PCS SET	
24	1464412000	1	PIN FOR SIDE BROOM ARM	
25	1464415000	1	Seitenbürste Kabel links	
26		2	K4	
27	1464500000	1	BRACKET FOR LEFT SIDE BROOM	
28	1464499000	1	COVER SIDE BROOM	
29	1464427000	1	BRACKET LEFT SIDE BROOM ADJUSTMENT	
30	1465318000	1	Seitenbesen Stahlmix/PP 1,3 280x450 mm	
30	1465320000	1	Seitenbesen PP 1,0 schwarz, 280x450 mm	[1]
30	1465319000	1	Seitenbesen Naturb./Mix 5, 280x450 mm	[1]
31		1	30	
32	1464843000	1	HUB FOR SIDE BROOM	
33		2	K6	
34	1464243000	1	SCREW SHOULDER 8X12 M6 ISO7379	
35	1464336000	1	Sicherungsautomat 15A	
K1	1464946000	1	Seitenbesen-Set, links, Stahlmix	[2]
K2	1465046000	1	HARDWARE GEARMOTOR KIT	
K3	1465047000	1	HARDWARE GEARMOTOR SUPPORT KIT	
K4	1465048000	1	PIN FOR SIDE BROOM SUPPORT KIT	
K5	1465049000	1	KNOB SIDE BROOM KIT	
K6	1465050000	1	HARDWARE SIDE BROOM SPRING SUPPORT KIT	
K7	1465051000	1	HARDWARE SIDE BROOM ADJ. BRACKET KIT	

Part Notes:

[1] - OPTIONAL

[2] - OPTIONAL - INSTALLATION INSTRUCTION REF. 1465242000

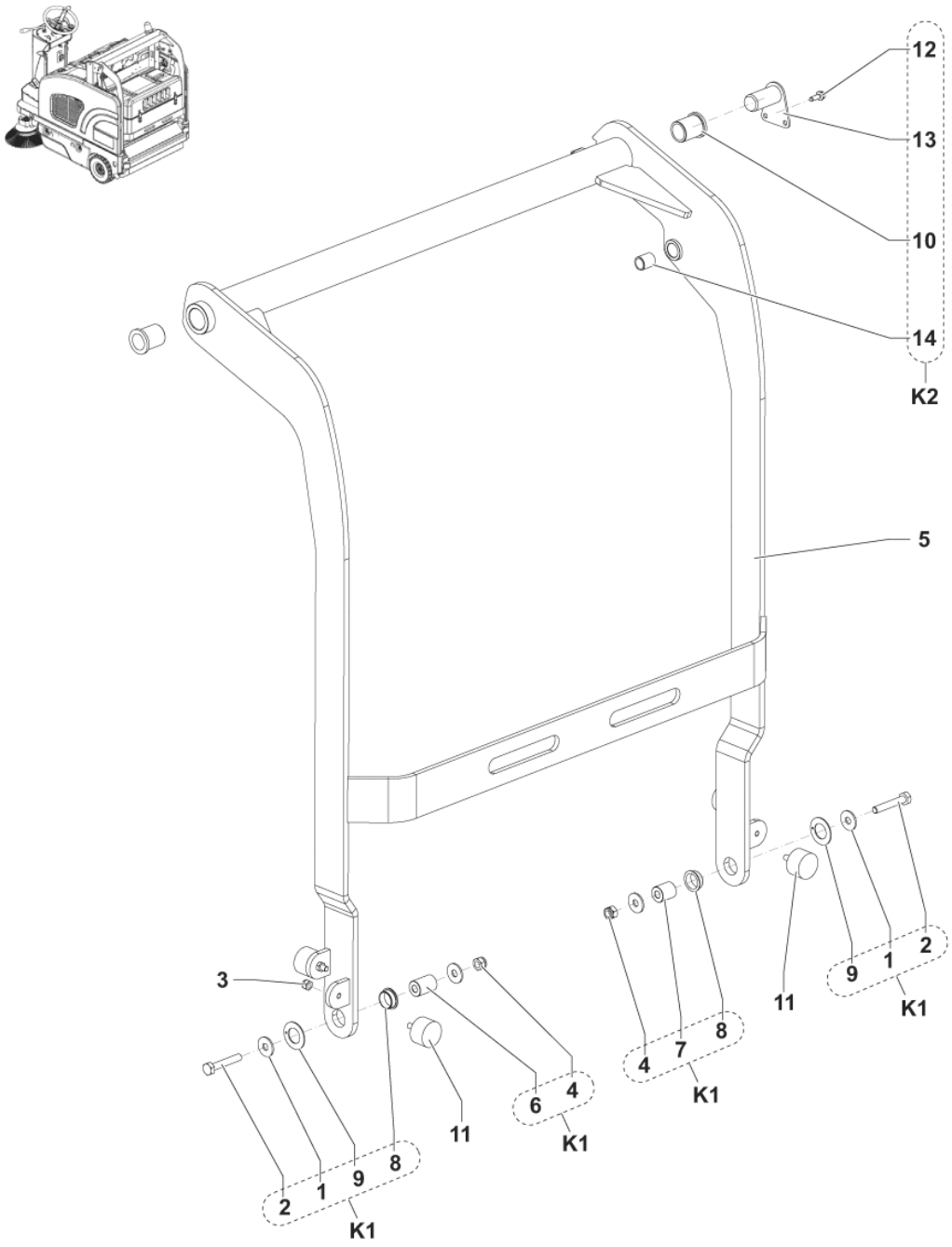
12
13
10
14
K2
5
3
2
1
9
8
11
6
4
K1
4
7
8
K1
11
9
1
2
K1

Pos.	Artikel-Nr.	Menge	Variante	Notes
1		4	K1	
2		2	K1	
3	33005533	4	Nut HEX M8 UNI 5589	
4		2	K1	
5	1464159000	1	ARM LIFTING HOPPER WASTE	
6		1	K1	
7		1	K1	
8		2	K1	
9		2	K1	
10		2	K2	
11	1467047000	4	STOSSSTANGE M8 D.40X25MM SIP	
12		2	K2	
13		2	K2	
14		1	K2	
K1	1465063000	1	ARM PRIMARY HOPPER FIXING KIT	
K2	1465064000	1	PIN PRIMARY ARM KIT	

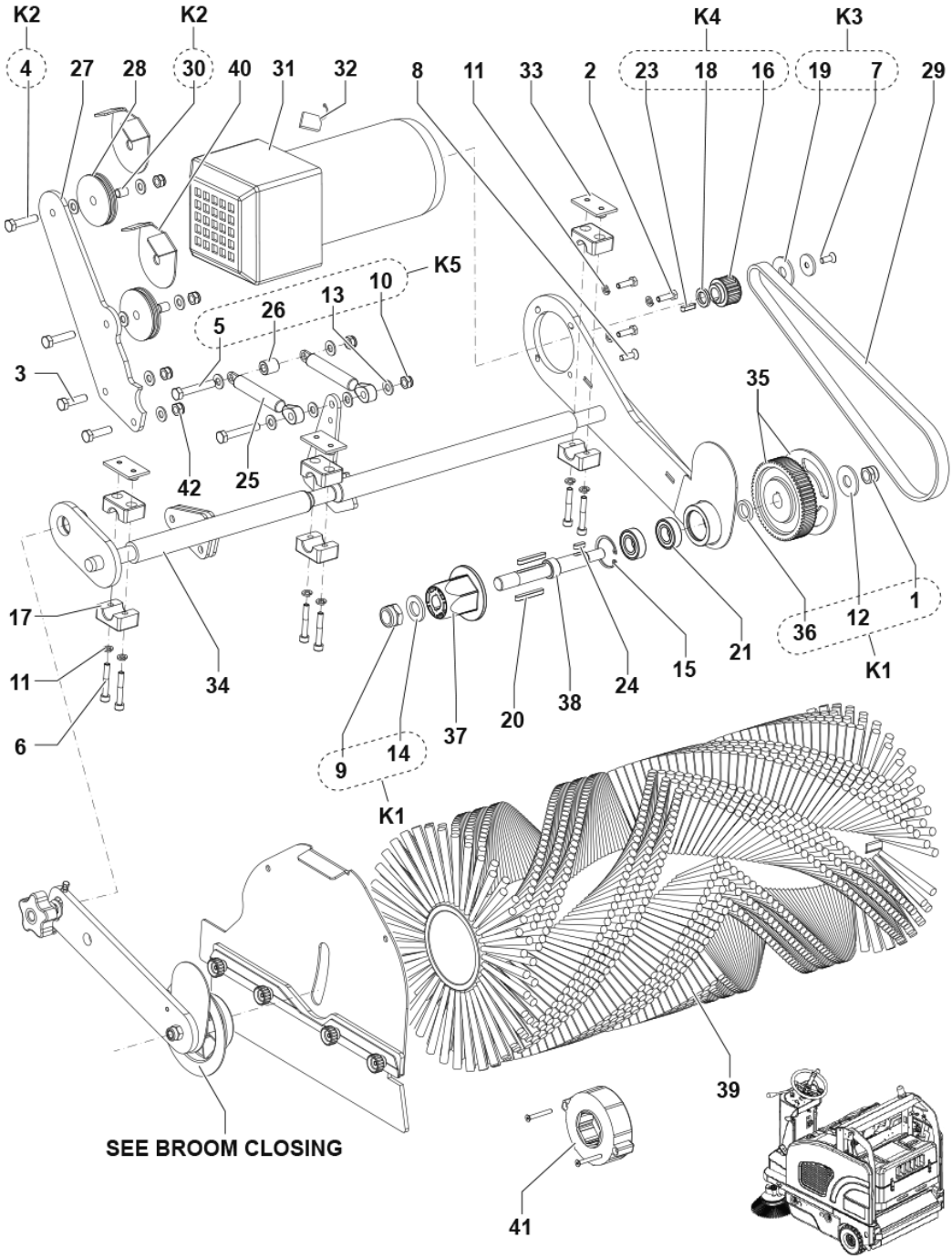
K2
K2
K4
K3
4
27
28
30
40
31
32
8
11
33
2
23
18
16
19
7
29
K5
10
13
26
5
3
35
42
25
17
34
11
6
9
14
37
20
38
24
15
21
36
12
1
K1
K1
39
SEE BROOM CLOSING
41

Pos.	Artikel-Nr.	Menge	Variante	Notes
1	1467685000	1	NUT LOCK HEX M12 LOW ISO10511 5 PCS SET	
2	33023470	1	SCREW M6X20 HEX HD ISO4017 10 PCS SET	
3	33003996	2	Schraube M8 x 30	
4		2	K2	
5		2	K5	
6	33004350	6	SCREW M6X40 CAP HD HEX SOCK ISO4762	
7		1	K3	
8	33004578	1	Schraube TPSEI 6x20	
9		1	K1	
10		6	K5	
11	33005851	9	Unterlegscheibe	
12		1	K1	
13		12	K5	
14		1	K1	
15	33006165	1	RING D 35 UNI7437	
16		1	K4	
17	1466733000	3	CLAMP PIPE FIXING D.18 -PAIR- SIP	
18		1	K4	
19		1	K3	
20	145 8011 000	2	Keil zu 3PS Hondamotor	
21	1467030000	2	BEARING BALL 6003 2RS PKD	
22		1	K1	
23		1	K4	
24	146 1017 000	1	Keil 5x5x15 zu SR 1500 HB	
25	1463358000	2	SPRING GAS 40KG	
26		1	K5	
27	1466157000	1	BRACKET PROTECTION PULLEY GALV. SIP	
28	1464239000	2	PULLEY BROOM LEVER	
29	1464266000	1	BELT HTD 825-5M	
30		2	K2	
31	1467562000	1	MOTOR MAIN BROOM 24V 600W SIP	
32	L08603949	1	Kohlenbürsten Kit 4pcs	[1]
33	1464983000	3	PLATE FOR COLLAR GALV.	
34	1464986000	1	SHAFT MAIN BROOM	
35	1466139000	1	PULLEY HTD KIT	
36		1	K1	
37	1467056000	1	HUB MAIN BROOM PKD	
38	1466079000	1	PIN MAIN BROOM PKD	
38	1466081000	1	Riemen neuer Umbaukit	[2]
39	1463913000	1	Kehrwalze PP 0,8 5 340x700 mm	
39	1463854000	1	Kehrwalze Mix 5 340x700 mm	[3]
39	1464947000	1	Kehrwalze Stahlmix 340x700 mm	[3]
40	1466144000	1	BRACKET PROTECTION PULLEYS KIT	[4]
41	1467525000	1	HUB CPL F MAIN BROOM KIT	[5]
42	33023574	1	NUT LOCK HEX M8 ISO10511 PCS 10 SET	
K1	1465052000	1	HARDWARE MAIN BROOM HUB KIT	
K2	1465053000	1	HARDWARE MAIN BROOM PULLEY KIT	
K3	1465054000	1	HARDWARE MAIN BR. MOTOR PULLEY KIT	
K4	1465055000	1	PULLEY MAIN BR. MOTOR KIT	
K5	1465056000	1	HARDWARE FOR GAS SPRING KIT	

Part Notes:

[1] - REPLACED BY 56601509
[2] - FOR MACHINE UP TO S/N 3810144000045 - SEE INST. INSTR. 1466133000
[3] - OPTIONAL
[4] - INSTALLATION INSTRUCTIONS: 1466145000
[5] - FOR ALL MAIN BROOMS: 1463913000 - 1463854000 - 1464947000

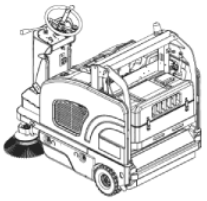

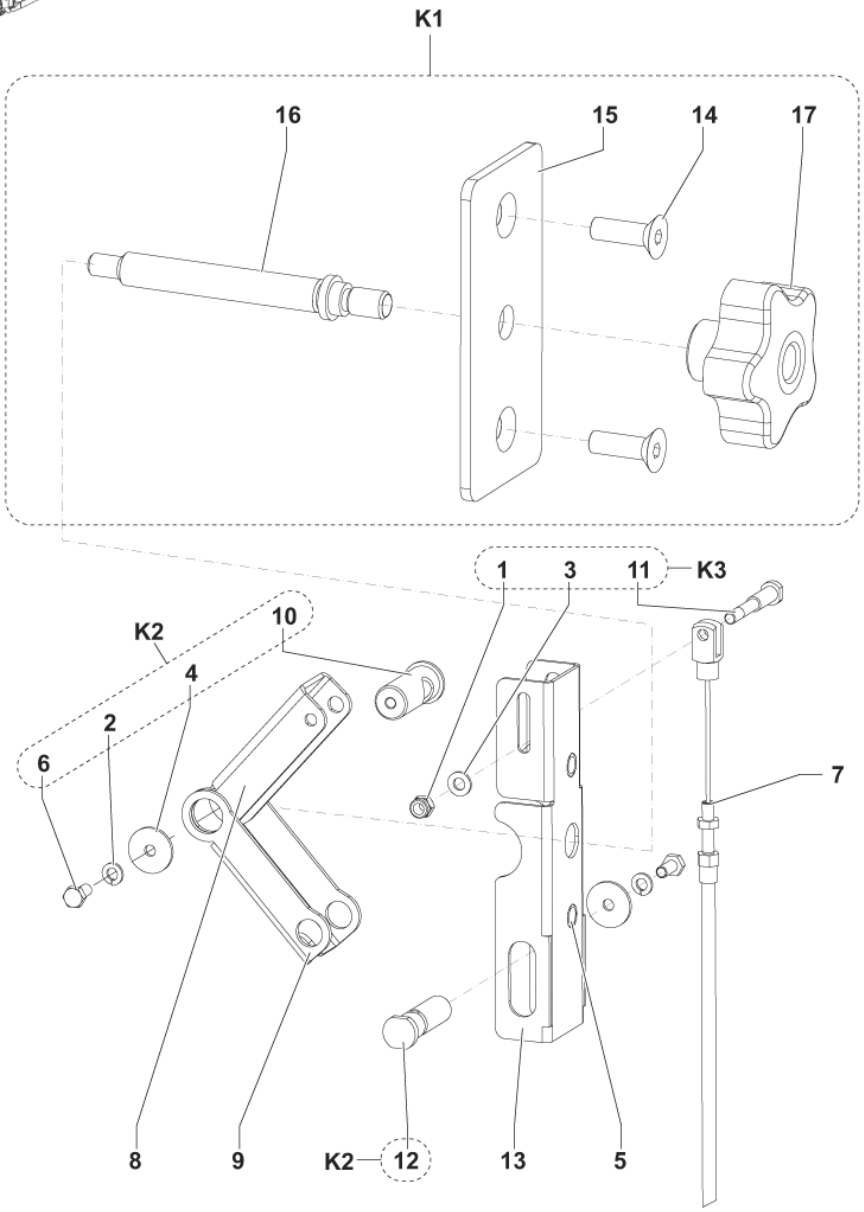
K1
16
15
14
17
1
3
11
K3
K2
10
4
2
6
7
8
9
K2
12
13
5

Pos.	Artikel-Nr.	Menge	Variante	Notes
1		1	K3	
2		2	K2	
3		1	K3	
4		2	K2	
5	145 4773 000	2	INSERT M8	
6		2	K2	
7	1464413000	1	CABLE MAIN BROOM	
8	1464449000	1	BRACKET UPPER MAIN BROOM SETTING	
9	1464450000	1	BRACKET LOWER MAIN BROOM SETTING	
10		1	K2	
11		1	K3	
12		1	K2	
13	1464462000	1	BRACKET GUIDE MAIN BROOM SETTING	
14		2	K1	
15		1	K1	
16		1	K1	
17	1464476000	1	KNOB LOBES M10 F. W/YELLOW CAP	
K1	1464914000	1	BROOM MAIN ADJUST. KIT	
K2	1465059000	1	BROOM MAIN ADJUST. KIT	
K3	1465060000	1	CABLE MAIN BROOM FIXING KIT	

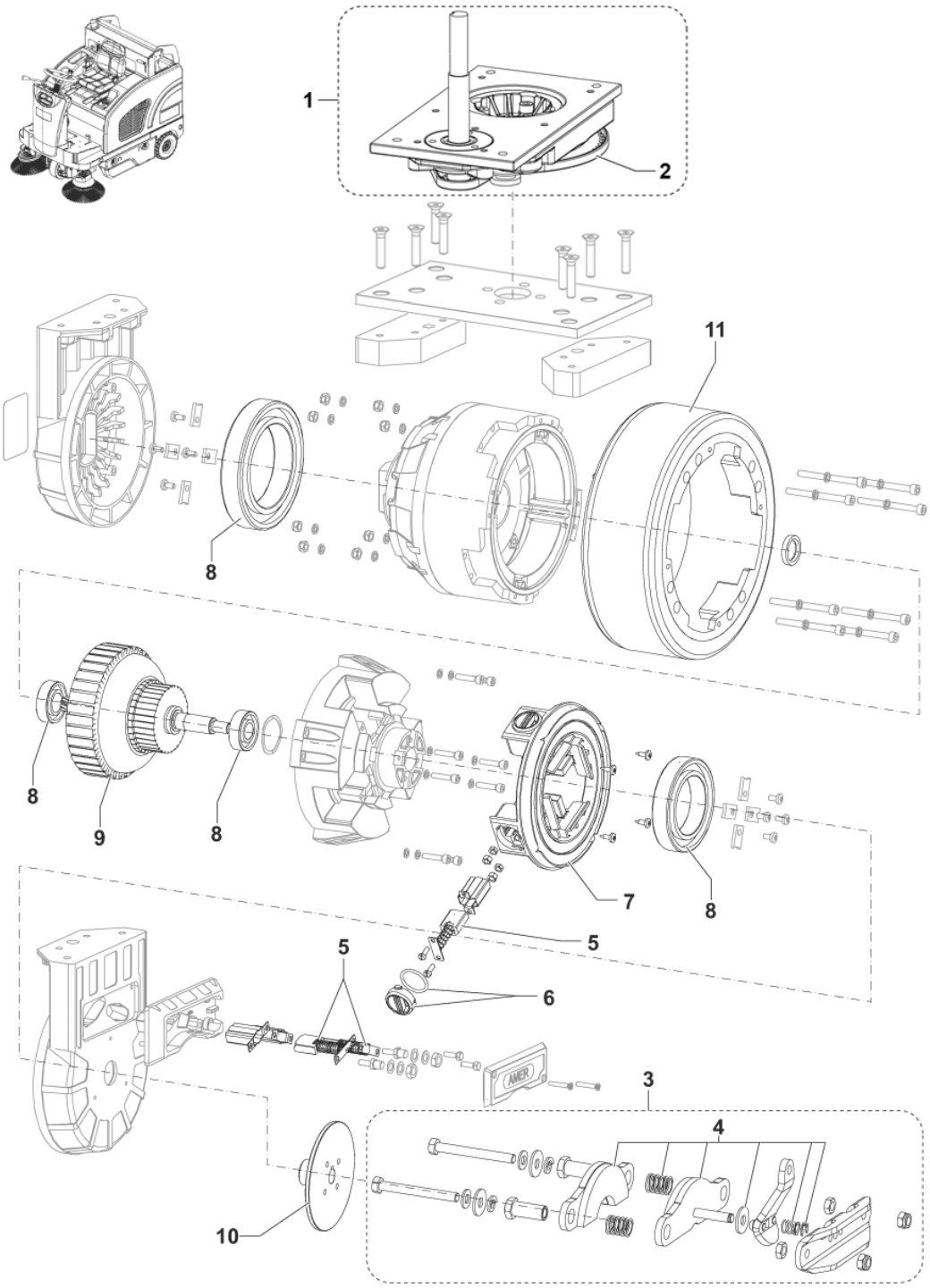
1
2
11
8
8
9
8
7
8
5
5
6
3
4
10

Pos.	Artikel-Nr.	Menge	Variante	Notes
1	1464834000	1	STEERING SYSTEM	
2	1465133000	1	CHAIN FOR STEERING	
3	1464804000	1	CALIPER BRAKE COMPLETE KIT	
4	1464805000	1	PADS BRAKE KIT	
5	9096960000	1	Kohlebürstenkit	
6	9096969000	4	Kappe m. Dichtung	
7	9096968000	1	RING CARBON BRUSHES HOLDER	
8	9096959000	1	BEARING BALL KIT	
9	1465182000	1	ARMATURE	
10	1467694000	1	Bremsscheibe mit Radnabe für Motor SIP	
11	1465314000	1	RING FOR MOTORWHEEL KIT	
11	1464955000	1	Antriebsrad, vorne, n. mark.	[1]

Part Notes:

[1] - OPTIONAL - INST. INSTR. 1465241000

Pos.	Artikel-Nr.	Menge	Variante	Notes
	1464951000	1	Seitenschürzen	
	146 0329 000	2	Antriebsrad, vorne, n. mark.	
	1465313000	1	Vollgummi-Räder-Set, hinten, n. mark.	
	1465170000	1	WHEEL TRACTION NON MARKING KIT	
	1464955000	1	Antriebsrad, vorne, n. mark.	
	1465320000	1	Seitenbesen PP 1,0 schwarz, 280x450 mm	
	1465319000	1	Seitenbesen Naturb./Mix 5, 280x450 mm	
	1464946000	1	Seitenbesen-Set, links, Stahlmix	
	1463854000	1	Kehrwalze Mix 5 340x700 mm	
	1464947000	1	Kehrwalze Stahlmix 340x700 mm	
	1464189000	1	Kassettenfilter, Ultra-Web, blau	
	1464953000	1	Dust-Guard-System	
	1464958000	1	Seitenbesen-Schutz-Set, rechts	
	1464959000	1	Seitenbesen-Schutz-Set, links	
	1464952000	1	Fahrerschutzdach-Set	
	1464956000	1	Fahrerschutzdach-Set	
	1466346000	1	Lichter-Set, vorne, 24V 70W	
	1464954000	1	Sicherheitsgurt-Set	
	33019556	1	Armlehne-Set rechts	
	1464960000	1	Armlehne-Set links	
	1465175000	1	Einbauladegerät 24V-30A 230V	
	80565000	4	Nassbatterie Semi T Monoblock, 6V-255 Ah	
	80564000	4	Gelbatterie Monoblock, 6V-180 Ah	[1]
	80564100	4	Gelbatterie Monoblock, 6V-240 Ah	
	80565200	1	Batterie 24V-360 Ah m. Aquamatic im Tray	
	80565300	1	Gelbatt. 24V-330Ah, Einzelzellen im Tray	
	1465171000	1	Batteriebefestigungs-Set	

Part Notes:

[1] - DE TSB-FC-2019-033 Exide GEL Batterien
TSB-FC-2019-033 Exide GEL battery

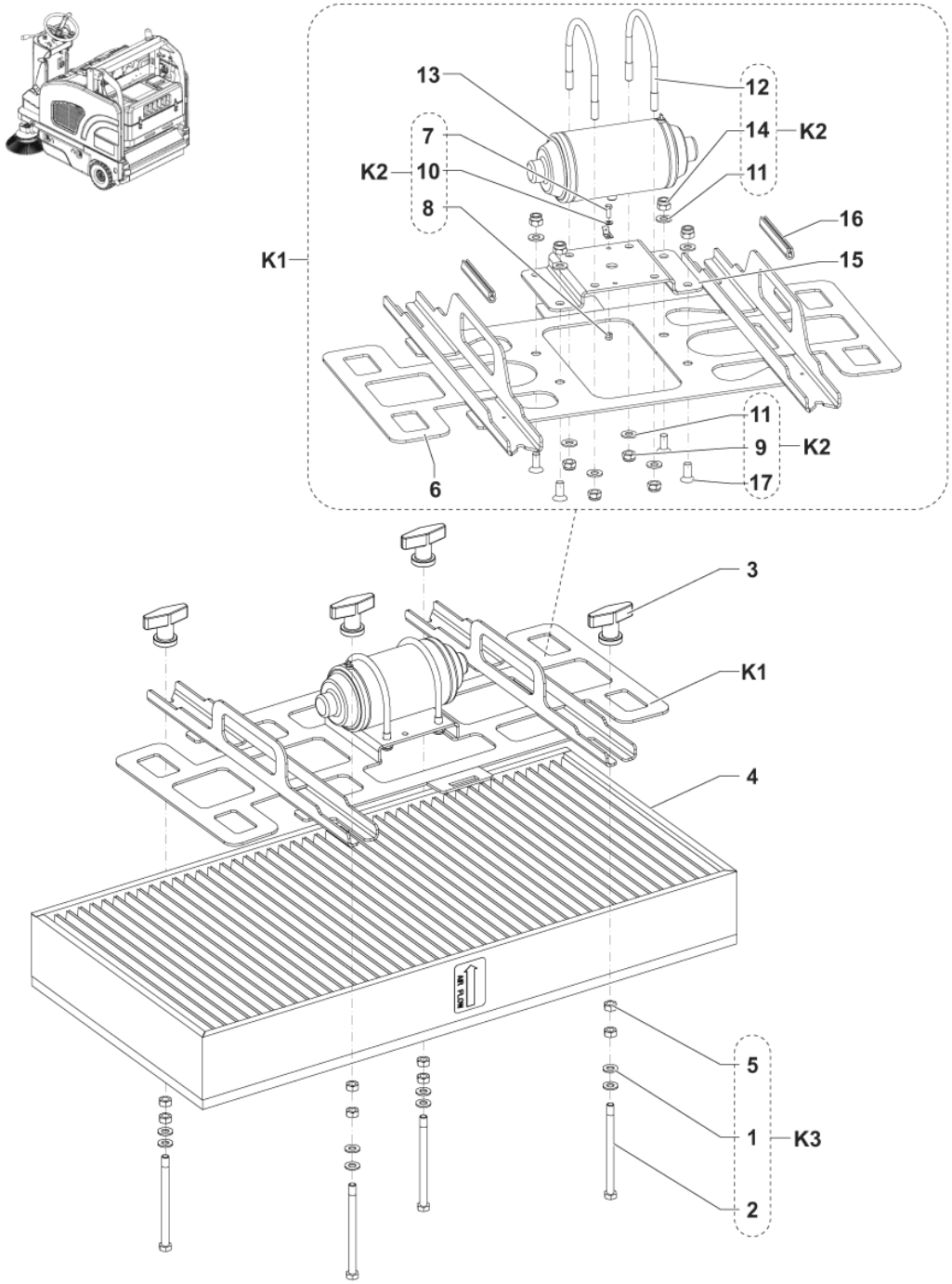
13
12
7
14
K2
K2
10
11
8
16
K1
15
11
9
K2
17
6
3
K1
4
5
1
K3
2

Pos.	Artikel-Nr.	Menge	Variante	Notes
1		8	K3	
2		4	K3	
3	9098257000	4	Flügelmutter	
4	1467878000	1	FILTER PANEL POLYESTER SPUNBOND SIP	
4	1464189000	1	Kassettenfilter, Ultra-Web, blau	[1]
4	1465402000	1	FILTER PANEL PAPER OPEN FINE DUST	[1]
4	1465403000	1	Kassettenfilter Polyester, Feinstaub	[1]
5		8	K3	
6		1	K1	
7		1	K2	
8		1	K2	
9		4	K2	
10		1	K2	
11		8	K2	
12		2	K2	
13	145 5539 000	1	Motor Filtershak.	
14		4	K2	
15		1	K1	
16		2	K1	
17		4	K2	
K1	1464918000	1	SHAKER FILTER KIT	
K2	1465061000	1	HARDWARE SHAKER FIXING KIT	
K3	1465062000	1	HARDWARE FILTER PLATE FIXING KIT	

Part Notes:

[1] - OPTIONAL

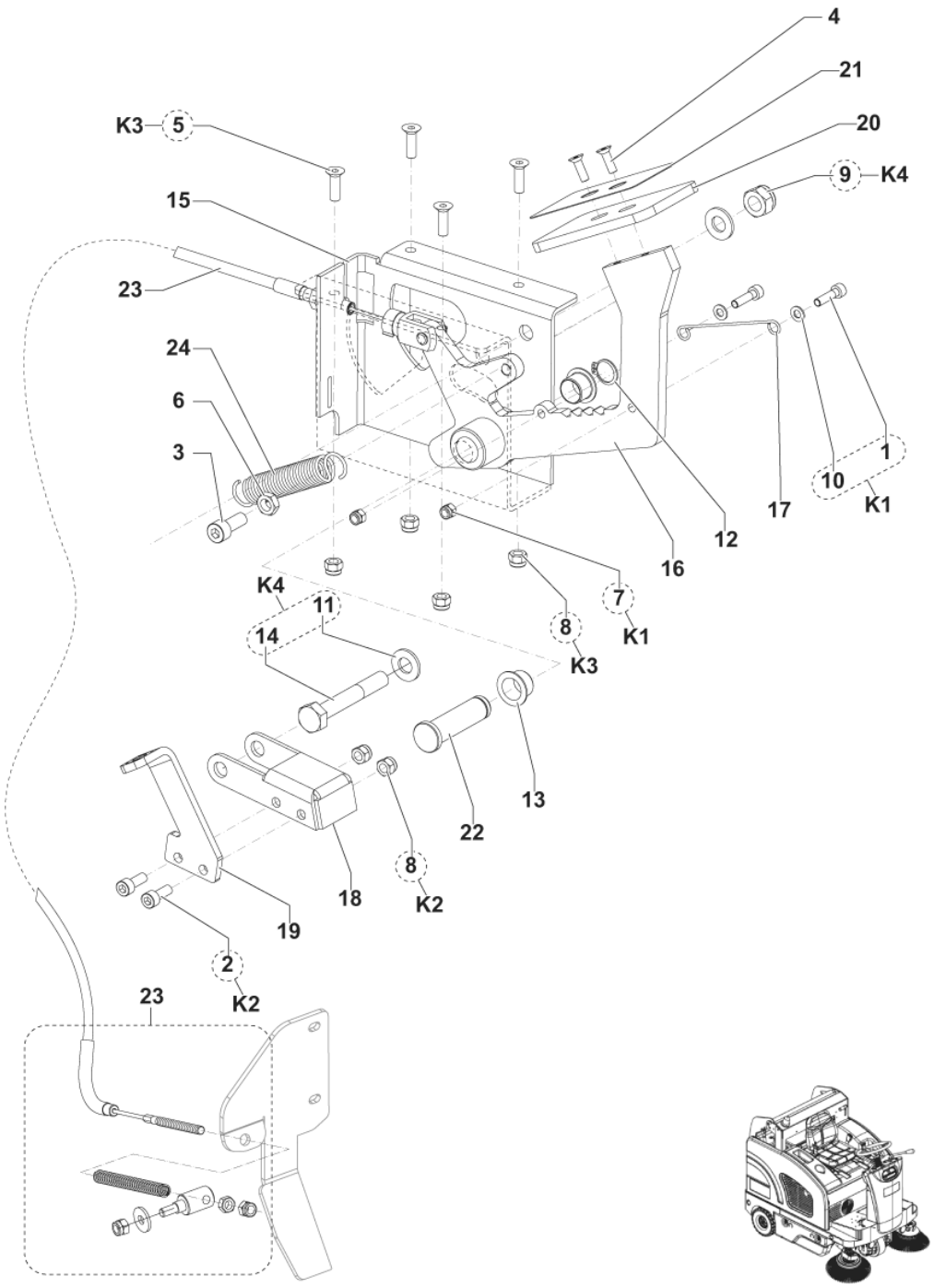
4
21
20
9
K4
K3
5
15
23
24
6
3
1
10
K1
17
12
16
7
K1
8
K3
K4
11
14
13
22
8
K2
18
19
2
K2
23

Pos.	Artikel-Nr.	Menge	Variante	Notes
1		2	K1	
2		2	K2	
3	33004365	1	SCREW M8X20 UNI5931	
4	33004563	2	Schraube	
5		4	K3	
6	33005533	1	Nut HEX M8 UNI 5589	
7		2	K1	
8		6	K3	
9		1	K4	
10		2	K1	
11		2	K4	
12	33006054	1	Sicherungsring D15	
13	146 0903 000	2	BEARING FLANGE IGLIDUR GFM-1517-12	
14		1	K4	
15	1464217000	1	SUPPORT BRAKE GALV.	
16	1464218000	1	LEVER BRAKE GALV.	
17	1464219000	1	SPRING LOCK BRAKE	
18	1464220000	1	LOCK PARKING BRAKE GALV.	
19	1464221000	1	PEDAL LOCK BRAKE GALV.	
20	1464222000	1	PLATE BRAKE PEDAL	
21	1464223000	1	MAT ANTI SLIP BRAKE PEDAL	
22	1464224000	1	PIN BRAKE PEDAL GALV.	
23	1467456000	1	CABLE BRAKE KIT	
24	1467046000	1	SPRING EXTENSION D.E.18 WIRE D.2 SIP	
K1	1465066000	1	HARDWARE SPRING LOCK BRAKE KIT	
K2	1465067000	1	HARDWARE LOCK BRAKE PEDAL KIT	
K3	1465068000	1	HARDWARE SUPPORT BRAKE KIT	
K4	1465069000	1	HARDWARE LOCK TOOTH KIT	

Pos.	Artikel-Nr.	Menge	Variante	Notes
NW	1468013000	3	SENSOR BACK UP PROXIMITY	
OM	33020442	1	Schlüsselschalter	
EOM	33006165	1	RING D 35 UNI7437	
EOM	33019324	2	Düsen Spray Kit	
EOM	1467246000	2	NOZZLE SPRAY D. 0.33 S.S. PKD	
EOM	1467245000	2	Rueckschlagventil Filter	
EOM	1467247000	2	NOZZLE SPRAY D. 0.53 BRASS PKD	
EOM	1467039000	2	FEDERZUG AUS KOHLENSTOFFSTAHL SIP	
EOM	1463358000	2	SPRING GAS 40KG	
EOM	1467040000	1	FAN RADIAL 24V SIP	
EOM	1463916000	1	PLATE FRONT SKIRT	
EOM	1464181000	1	BUSHING SUPPORT LEVER	
EOM	1467878000	1	FILTER PANEL POLYESTER SPUNBOND SIP	
EOM	1467894000	1	GASKET BULB RUBBER L.2450 MM SIP	
EOM	1466210000	1	CONTROLLER DRIVE WHEEL PKD	
EOM	1464219000	1	SPRING LOCK BRAKE	
EOM	1464241000	1	GEARMOTOR FOR RIGHT SIDE BROOM	
EOM	1464242000	1	GEARMOTOR LEFT SIDE BROOM	
EOM	1467823000	1	CARD ELECTRONIC CONTROL PANEL SIP	
EOM	1464266000	1	BELT HTD 825-5M	
EOM	1464275000	1	SKIRT REAR RECYCLE	
EOM	1464276000	1	PLATE REAR SKIRT FIXING	
EOM	1464277000	1	PLATE REAR SKIRT	
EOM	1464278000	2	PLATE SIDE KIRT FIXING	
EOM	1464289000	2	Relais SR 1301 24V20/30A	
EOM	1464336000	1	Sicherungsautomat 15A	
EOM	1464337000	1	FLAP METAL FRONT	
EOM	1464413000	1	CABLE MAIN BROOM	
EOM	1464414000	1	Seitenbürste Kabel rechts	
EOM	1464415000	1	Seitenbürste Kabel links	
EOM	1464425000	1	ELEKTRONISCHES GASPEDAL	
EOM	1467046000	1	SPRING EXTENSION D.E.18 WIRE D.2 SIP	
EOM	1467562000	1	MOTOR MAIN BROOM 24V 600W SIP	
EOM	1464465000	1	BRACKET FRONT LIGHT	[1]
EOM	1464476000	2	KNOB LOBES M10 F. W/YELLOW CAP	
EOM	1464497000	1	VORD. SCHÜRZE	
EOM	1467159000	1	SPARK PLUG NGK R BPR6ES PKD	
EOM	1464535000	1	GASKET RUBBER L.1430MM PKD	
EOM	1467109000	2	LOCK WITH KEY FOR HATCH PKD	
EOM	1467694000	1	Bremsscheibe mit Radnabe für Motor SIP	
EOM	1464804000	1	CALIPER BRAKE COMPLETE KIT	
EOM	9096960000	1	Kohlebürstenkit	
EOM	1464919000	1	HOSES HYDRAULIC WITH HARDWARE KIT	
EOM	1464920000	1	CYLINDER KIT	
EOM	1464921000	1	ROD FOR FLAP KIT	
EOM	1464982000	1	SWITCH ELECTROMAGNETIC 24V 120A	
EOM	1466139000	1	PULLEY HTD KIT	
EOM	1467056000	1	HUB MAIN BROOM PKD	
EOM	1465037000	1	PIN HOPPER BEARING KIT	
EOM	1465040000	1	HARDWARE FRONT FLAP KIT	
EOM	1465049000	1	KNOB SIDE BROOM KIT	
EOM	1465052000	1	HARDWARE MAIN BROOM HUB KIT	
EOM	1465095000	1	GASKETS FOR PISTON KIT	[2]
EOM	1465096000	1	GASKETS FOR CYLINDER HEAD KIT	[2]
EOM	1465647000	1	PUMP WATER KIT	
EOM	1465175000	1	Einbauladegerät 24V-30A 230V	
EOM	1465177000	1	GEARCASE HYDRAULIC 12V-24V	
EOM	1465273000	1	CABLE LOCK RELEASE	
EOM	1465281000	2	BEARING SLEEVE IGLIDUR MSM-1622-15	

Pos.	Artikel-Nr.	Menge	Variante	Notes
EOM	1465314000	1	RING FOR MOTORWHEEL KIT	
EOM	1465355000	1	CAP SOLUTION TANK KIT	
EOM	1465356000	1	HARDWARE DUSTGUARD KIT	
EOM	1465357000	1	HOSES POLYESTER DUSTGUARD KIT	
EOM	1465358000	1	FITTINGS AND REDUCTIONS DUST GUARD KIT	
EOM	1467456000	1	CABLE BRAKE KIT	
EOM	1465396000	1	SCHÜRZE KOMPLETT	
EOM	1465398000	1	SWITCH HOPPER RAISING KIT	
EOM	1465399000	1	SWITCH HOPPER LEAD KIT	
EOM	1465400000	1	SWITCH FW RW KIT	
EOM	1465401000	1	SWITCH DUST GUARD KIT	
EOM	9096959000	1	BEARING BALL KIT	
EOM	9097208000	1	Relais	
EOM	9096969000	4	Kappe m. Dichtung	
EOM	9100000860	1	Wasserfilter	
EOM	1467023000	1	HUB LEFT MAIN BROOM PKD	
EOM	44905699	1	BEARING BALL 6001 2RS PKD	
EOM	1467024000	1	SPRING PKD	
EOM	1467083000	2	CARBON BRUSH 2 PCS SET	
EOM	145 5539 000	1	Motor Filtershak.	
EOM	9100000878	1	FUSE BLADE 3A PKD	
EOM	1467030000	2	BEARING BALL 6003 2RS PKD	
EOM	145 8514 000	3	Sicherung 25A	
EOM	1466319000	1	JOINT UNIVERSAL D.17 PKD	
EOM	145 9852 000	1	FUSE BLADE 5A UL	
EOM	145 9854 000	1	Sicherung 50A	
EOM	1467034000	1	FUSE BLADE 10A PKD	
EOM	146 0329 000	2	Antriebsrad, vorne, n. mark.	
EOM	146 0840 000	1	Sicherung 150A	
EOM	146 0845 000	1	Schalter	
EOM	146 0846 000	1	Schalter f. SR1300H B	
EOM	146 0903 000	2	BEARING FLANGE IGLIDUR GFM-1517-12	
EOM	146 0986 000	1	SPRING	
EOM	146 1167 000	1	Schalter	
EOM	146 1317 000	1	Feder SR 1500 HD	
EOM	1466683000	1	Sicherheitsschalter	
EOM	146 1728 000	1	Kontakt	
EOM	1467888000	2	WHEEL SOLID 4.00-4 BLACK SET	
EOM	1466374000	8	KNOB KNURLED M6 FEMALE PKD	
EOM	9100000861	1	NET WATER FILTER REINFORCED PKD	
EOM	909 6622 000	6	Relais 24 V 40 A	
EOM	L08603949	1	Kohlenbürsten Kit 4pcs	[3]
EOM	1464805000	1	PADS BRAKE KIT	
EOM	1465055000	1	PULLEY MAIN BR. MOTOR KIT	
EOM	1464982000	1	SWITCH ELECTROMAGNETIC 24V 120A	

Part Notes:

[1] - SEE TSB-FC-2015-013
[2] - STOCK COVERS GUARANTEE
[3] - REPLACED BY 56601509

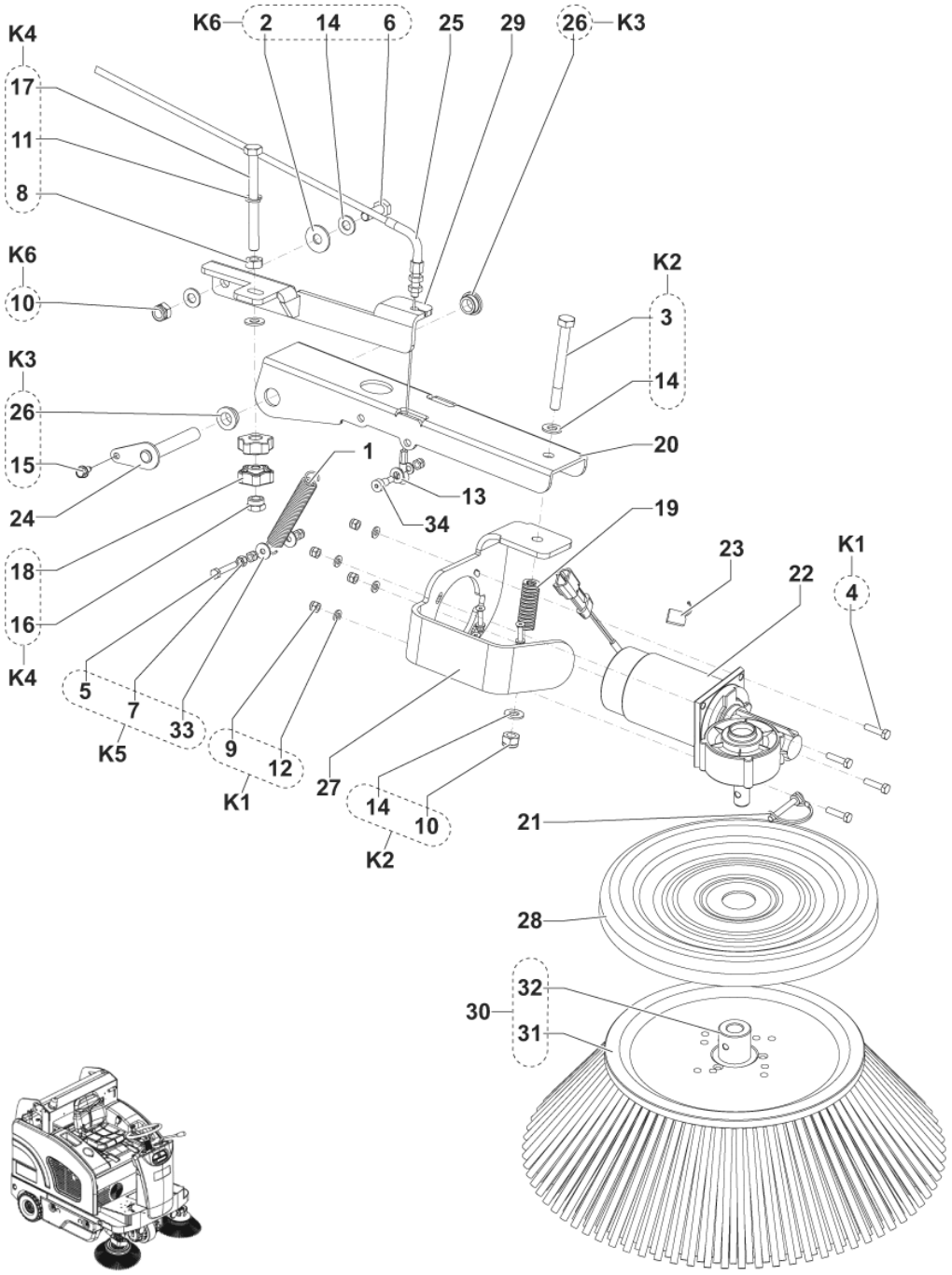
K6
2
14
6
25
29
26
K3
K4
17
11
8
K6
10
K2
3
14
K3
26
15
24
18
16
K4
1
13
34
20
19
23
22
K1
4
5
7
33
K5
9
12
K1
27
14
10
K2
21
28
32
30
31

Pos.	Artikel-Nr.	Menge	Variante	Notes
1	146 0986 000	1	SPRING	
2		1	K6	
3		1	K2	
4		4	K1	
5		1	K5	
6		1	K6	
7		1	K5	
8		1	K4	
9		7	K1	
10		2	K6	
11		1	K4	
12		5	K1	
13	33023208	1	WASHER M8 UNI6592 10 PCS SET	
14		5	K2	
15		1	K3	
16		1	K4	
17		1	K4	
18		2	K4	
19	146 1317 000	1	Feder SR 1500 HD	
20	1463903000	1	LEVER SIDE BROOM LIFTING	
21	1463960000	1	Bolzen zu Halterung Seitenbürste	
22	1464241000	1	GEARMOTOR FOR RIGHT SIDE BROOM	
23	1467083000	1	CARBON BRUSH 2 PCS SET	
24	1464412000	1	PIN FOR SIDE BROOM ARM	
25	1464414000	1	Seitenbürste Kabel rechts	
26		2	K3	
27	1464464000	1	BRACKET FOR RIGHT SIDE BROOM	
28	1464499000	1	COVER SIDE BROOM	
29	1464507000	1	BRACKET RIGHT SIDE BROOM ADJUSTMENT	
30	1465318000	1	Seitenbesen Stahlmix/PP 1,3 280x450 mm	
30	1465320000	1	Seitenbesen PP 1,0 schwarz, 280x450 mm	[1]
30	1465319000	1	Seitenbesen Naturb./Mix 5, 280x450 mm	[1]
31		1	30	
32	1464843000	1	HUB FOR SIDE BROOM	
33		2	K5	
34	1464243000	1	SCREW SHOULDER 8X12 M6 ISO7379	
K1	1465046000	1	HARDWARE GEARMOTOR KIT	
K2	1465047000	1	HARDWARE GEARMOTOR SUPPORT KIT	
K3	1465048000	1	PIN FOR SIDE BROOM SUPPORT KIT	
K4	1465049000	1	KNOB SIDE BROOM KIT	
K5	1465050000	1	HARDWARE SIDE BROOM SPRING SUPPORT KIT	
K6	1465051000	1	HARDWARE SIDE BROOM ADJ. BRACKET KIT	

Part Notes:

[1] - OPTIONAL

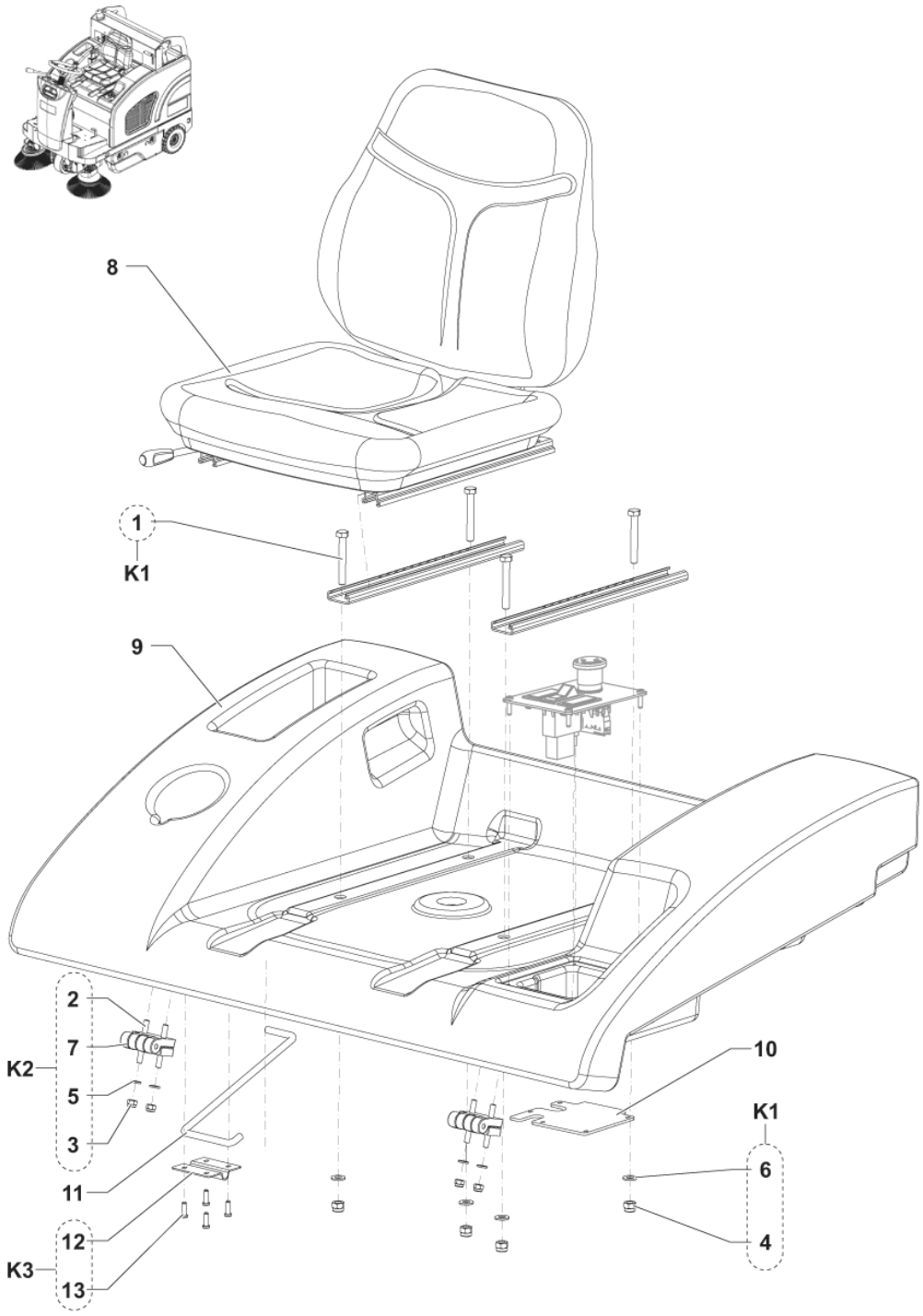
8
1
K1
9
2
7
K2
5
3
11
12
K3
13
10
K1
6
4

Pos.	Artikel-Nr.	Menge	Variante	Notes
1		4	K1	
2		8	K2	
3		4	K2	
4		4	K1	
5		4	K2	
6		4	K1	
7	33009531	2	ScharnierK2	
8	1467028000	1	SEAT PKD	
9	1463908000	1	SUPPORT SEAT	
10	1464975000	1	COVER HARNESS	
11	1464286000	1	BAR SAFETY F SEAT BONNET	
12		1	K3	
13		4	K3	
K1	1465043000	1	HARDWARE FOR SEAT KIT	
K2	1465041000	1	HINGE FOR BONNET KIT	
K3	1465042000	1	SUPPORT F SAFETY BAR KIT	

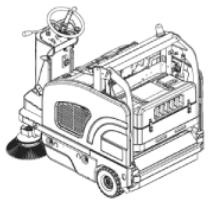

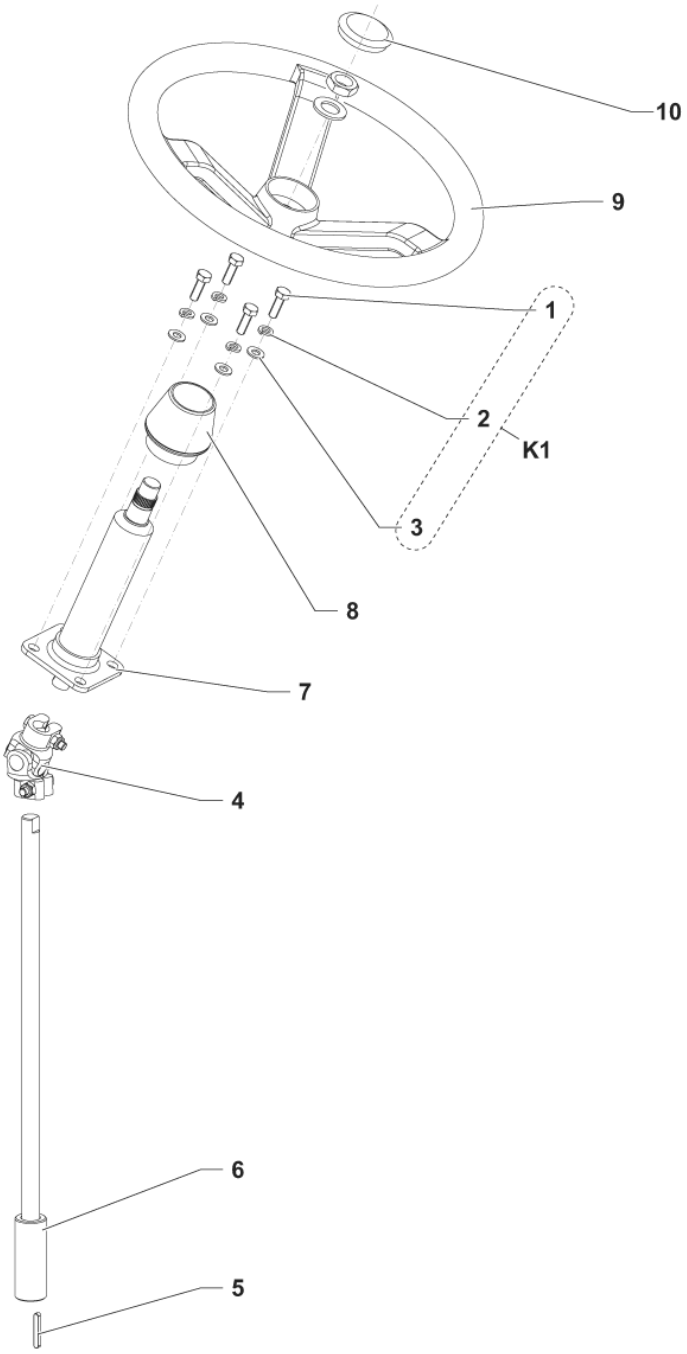
10
9
1
2
K1
3
8
7
4
6
5

Pos.	Artikel-Nr.	Menge	Variante	Notes
1		4	K1	
2		4	K1	
3		4	K1	
4	1466319000	1	JOINT UNIVERSAL D.17 PKD	
5	146 0830 000	1	Keil 5X5X36 UNI6604A	
6	1463895000	1	SHAFT STEERING	
7	1464136000	1	COLUMN STEERING	
8	1467055000	1	COVER F STEERING COLUMN SIP	
9	1467048000	1	STEERING WHEEL D.362 TAPER 1/19.26 SIP	
10	1467031000	1	CAP PKD	
K1	1465071000	1	HARDWARE STEERING COLUMN KIT	

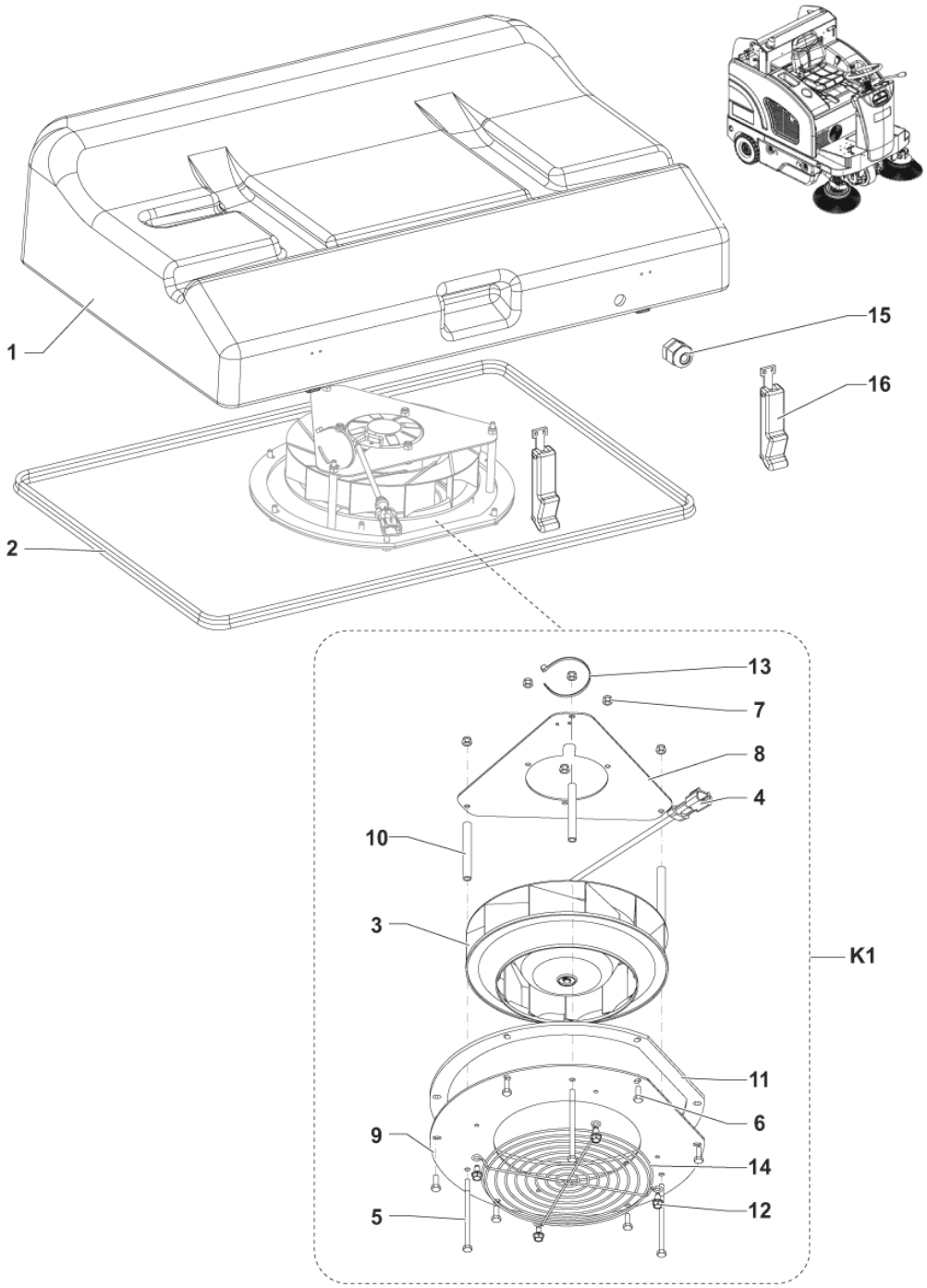
1
2
15
16
13
7
8
4
10
3
K1
11
6
9
14
5
12

Pos.	Artikel-Nr.	Menge	Variante	Notes
1	1464190000	1	CONTAINER VACUUM MOTOR PLAST. GREY	
2	1467894000	1	GASKET BULB RUBBER L.2450 MM SIP	
3	1467040000	1	FAN RADIAL 24V SIP	
4		1	K1	
5		3	K1	
6		6	K1	
7		6	K1	
8		1	K1	
9		1	K1	
10		3	K1	
11		1	K1	
12		4	K1	
13		1	K1	
14		1	K1	
15	146 1892 000	1	CLAMP CABLE	
16	1467042000	4	LATCH RUBBER PKD	
K1	1464927000	1	FAN RADIAL 24V KIT	

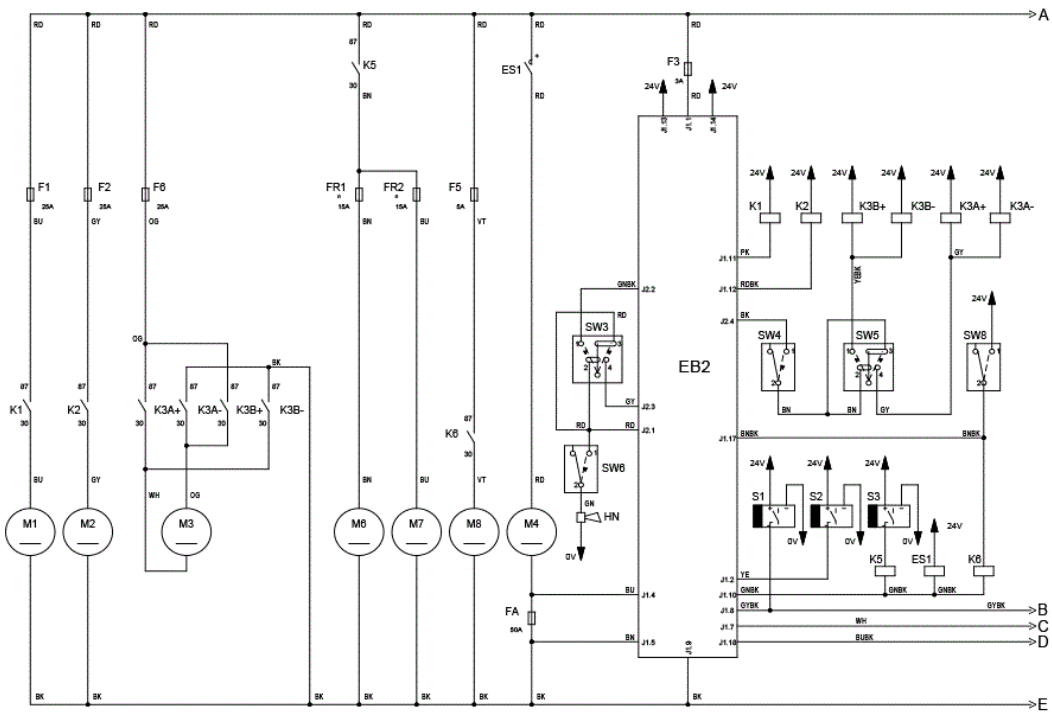
A
B
C
D
E
F1
F2
F6
FR1
FR2
F5
K5
ES1
F3
K1
K2
K3B+
K3B-
K3A+
K3A-
SW3
SW4
SW5
SW8
EB2
SW6
HN
S1
S2
S3
K6
FA
M1
M2
M3
M6
M7
M8
M4

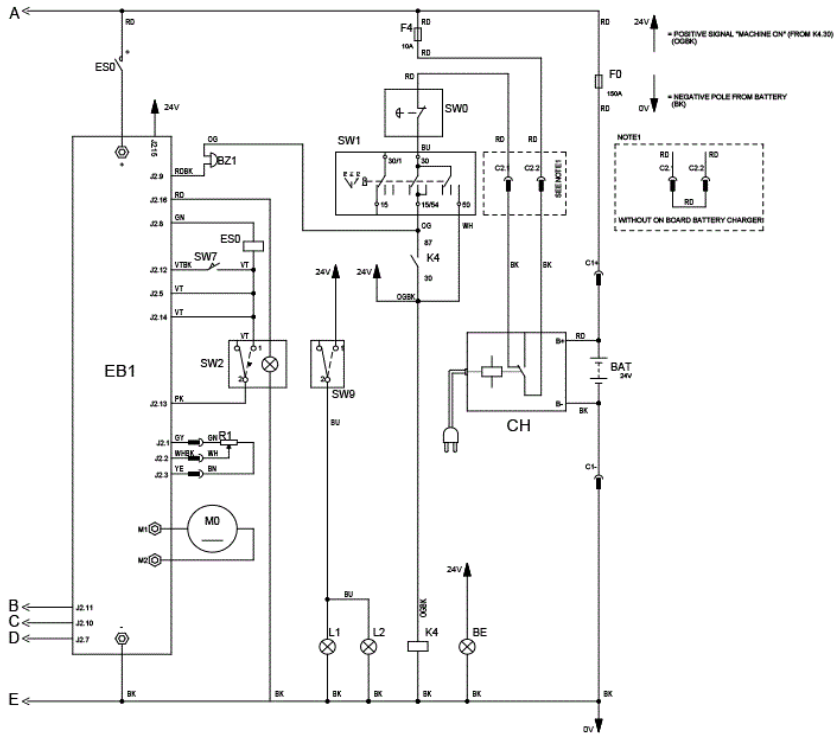
A
B
C
D
E
ES0
F4
F0
SW0
SW1
BZ1
SW7
K4
SW2
SW9
EB1
CH
BAT
R1
M0
L1
L2
BE
= POSITIVE SIGNAL "MACHINE ON" (FROM K4.30) (OGBK)
= NEGATIVE POLE FROM BATTERY (BK)
NOTE1
WITHOUT ON BOARD BATTERY CHARGER

Pos.	Artikel-Nr.	Menge	Variante	Notes
BZ1	909 6126 000		Warnton	
BE	1464948000		Warnleuchte	
C1	1467029000		CONNECTOR 175A RED PKD	
CH	1465175000		Einbauladegerät 24V-30A 230V	
EB1	1466210000		CONTROLLER DRIVE WHEEL PKD	
EB2	1467823000		CARD ELECTRONIC CONTROL PANEL SIP	
ES0	1464982000		SWITCH ELECTROMAGNETIC 24V 120A	
ES1	9097208000		Relais	
FA	145 9854 000		Sicherung 50A	
F0	146 0840 000		Sicherung 150A	
F1	145 8514 000		Sicherung 25A	
F2	145 8514 000		Sicherung 25A	
F3	9100000878		FUSE BLADE 3A PKD	
F4	1467034000		FUSE BLADE 10A PKD	
F5	145 9852 000		FUSE BLADE 5A UL	
F6	145 8514 000		Sicherung 25A	
FR1	1464336000		Sicherungsautomat 15A	
FR2	1464336000		Sicherungsautomat 15A	
HN	1467032000		HORN 24V 112DB SIP	
K1	909 6622 000		Relais 24 V 40 A	
K2	909 6622 000		Relais 24 V 40 A	
K3A+,-	909 6622 000		Relais 24 V 40 A	
K3B+,-	909 6622 000		Relais 24 V 40 A	
K4	1464289000		Relais SR 1301 24V20/30A	
K5	1464289000		Relais SR 1301 24V20/30A	
K6	1464289000		Relais SR 1301 24V20/30A	[1]
L1, L2	33019229		HEADLIGHT 24V	[2]
M0	1464913000		ANTRIEBSRAD KOMPLETT	
M1	1467040000		FAN RADIAL 24V SIP	
M2	145 5539 000		Motor Filtershak.	
M3	1465177000		GEARCASE HYDRAULIC 12V-24V	
M4	1467562000		MOTOR MAIN BROOM 24V 600W SIP	
M6	1464241000		GEARMOTOR FOR RIGHT SIDE BROOM	
M7	1464242000		GEARMOTOR LEFT SIDE BROOM	
M8	1465647000		PUMP WATER KIT	
R1	1464425000		ELEKTRONISCHES GASPEDAL	
S1	1468013000		SENSOR BACK UP PROXIMITY	
S2	1468013000		SENSOR BACK UP PROXIMITY	
S3	1468013000		SENSOR BACK UP PROXIMITY	
SW0	1466683000		Sicherheitsschalter	
SW1	33020442		Schlüsselschalter	
SW2	1465400000		SWITCH FW RW KIT	
SW3	146 0846 000		Schalter f. SR1300H B	
SW4	1465399000		SWITCH HOPPER LEAD KIT	
SW5	1465398000		SWITCH HOPPER RAISING KIT	
SW6	146 0845 000		Schalter	
SW8	1465401000		SWITCH DUST GUARD KIT	
SW9	146 1167 000		Schalter	

Part Notes:

[1] - TSB-FC-2017-024 hopper relay SW4000

[2] - SEE TSB-FC-2015-013

© 2023 - Nilfisk A/S