# PARTS LIST



2026.08.03

NILFISK

# TABLE OF CONTENTS


PL ACCELERATOR PEDAL ASSY . . . . . 1
PL ACCESSORIES - CHARGER BATT. ONBOARD - LIGHT FRONT - USB PORT . . . . . 3
PL ACCESSORIES - DUSTGUARD . . . . . 5
PL ACCESSORIES - FILTER POCKET . . . . . 7
PL ACCESSORIES - GUARD OVERHEAD - CANOPY FOR OHG . . . . . 9
PL ACCESSORIES - GUARD SIDE BROOM . . . . . 11
PL BRAKE PEDAL ASSY . . . . . 13
PL COLUMN DASHBOARD ASSY . . . . . 15
PL COVERS ASSY . . . . . 17
PL CYLINDERS ASSY . . . . . 19
PL ELECTRIC SYSTEM . . . . . 21
PL ELECTRICAL COMPONENTS ASSY . . . . . 23
PL FAN SUPPORT ASSY . . . . . 25
PL FILTER SUPPORT ASSY . . . . . 27
PL FOOTBOARD ASSY . . . . . 29
PL FRONT SKIRT ASSY . . . . . 31
PL HATCHES ASSY . . . . . 33
PL HYDRAULIC ASSY . . . . . 35
PL LEFT ARM MAIN BROOM ASSY . . . . . 37
PL LEFT BROOM ASSY . . . . . 39
PL LIFTING HOPPER ASSY . . . . . 41
PL LIFTING HOPPER ASSY 2 . . . . . 43
PL MAIN BROOM ADJUSTMENT . . . . . 45
PL MAIN BROOM ASSY . . . . . 47
PL MOTORWHEEL ASSY . . . . . 49
PL PLATE ASSY . . . . . 51
PL REAR WHEELS ASSY . . . . . 53
PL RIGHT BROOM ASSY . . . . . 55
PL SHAKER FILTER ASSY . . . . . 57
PL SKIRTS ASSY . . . . . 59
PL STEERING MOTORWHEEL ASSY . . . . . 61
PL SUPPORT SEAT ASSY . . . . . 63
PL WIRING DIAGRAM BATTERY . . . . . 65
PL VACUUM FAN ASSY . . . . . 67
PL RECOMMENDED SW5500 B . . . . . 69

# PL ACCELERATOR PEDAL ASSY

2018.04.05

SW5500 B NIL

2018.04.05

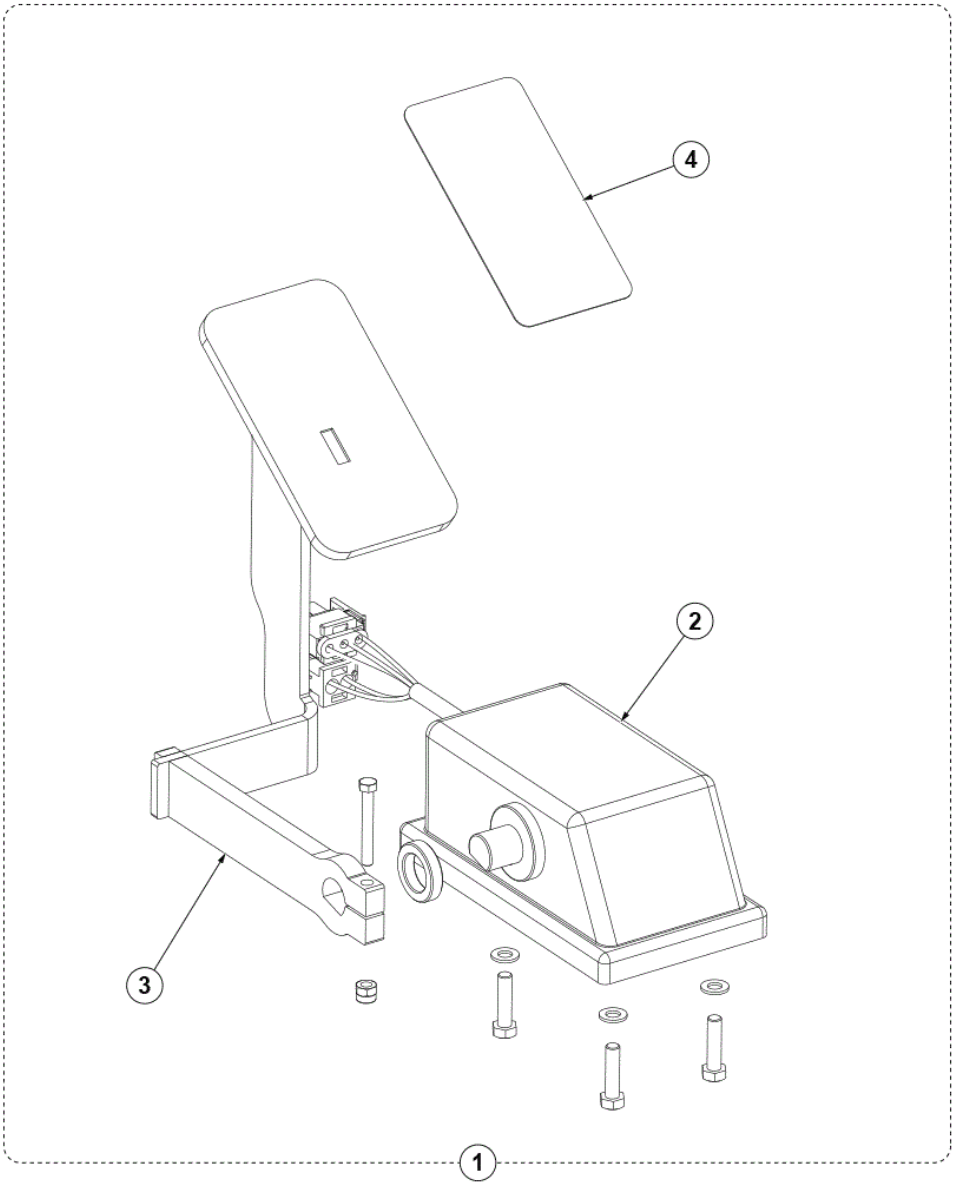

| Pos. | Artikel-Nr. | Menge | Variante | Notes |
|---|---|---|---|---|
| 1 | 1466589000 | 1 | PEDAL ELECTRONIC ACCELERATOR KIT | |
| 2 | 1466592000 | 1 | ACCELERATOR ELECTRONIC SIP | |
| 3 | 1466590000 | 1 | PEDAL F ACCELERATOR KIT | |
| 4 | 1466591000 | 1 | ANTI-SLIP SURFACING BLACK 50X95MM KIT | |

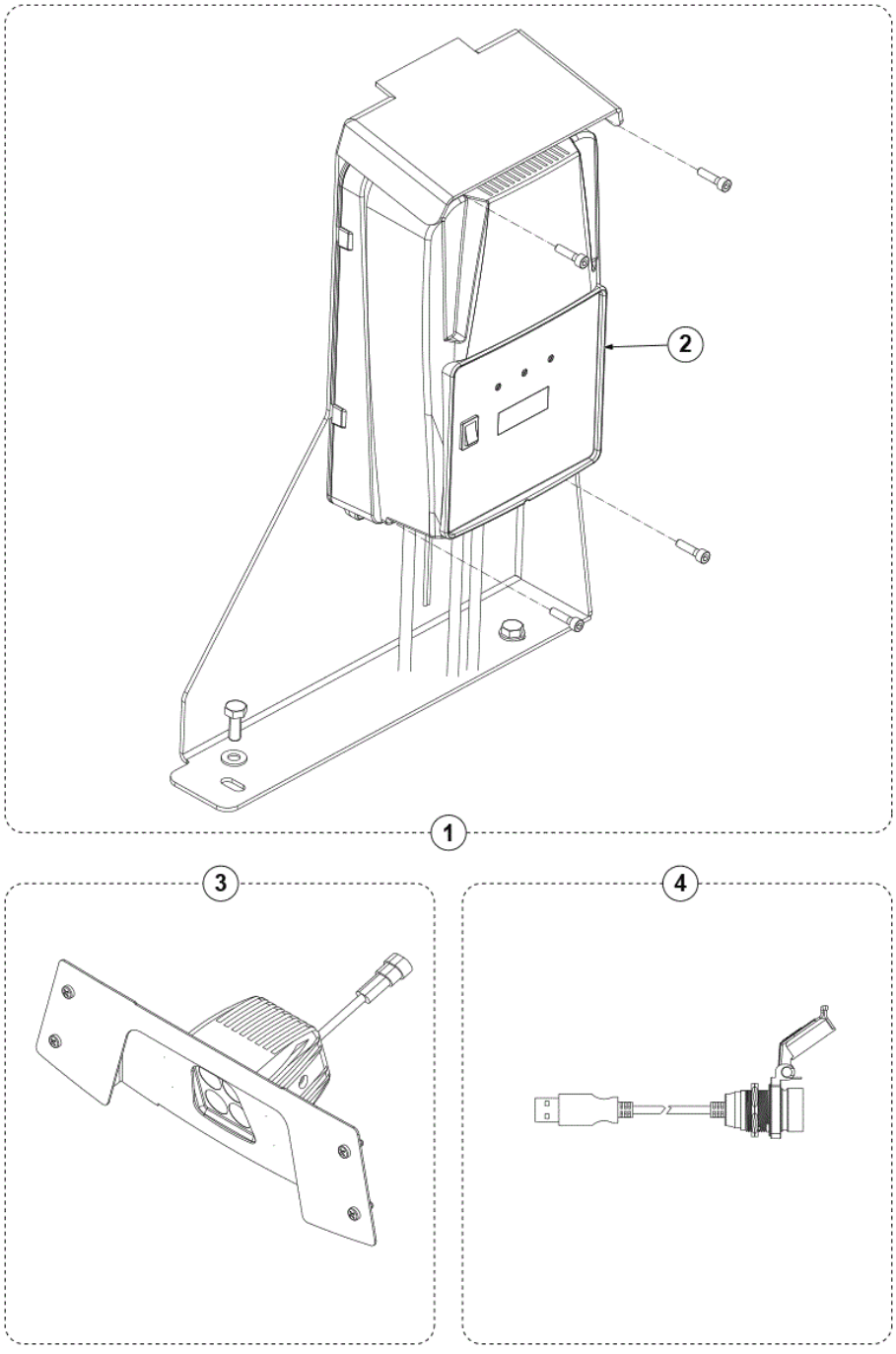
2
1
3
4

| Pos. | Artikel-Nr. | Menge | Variante | Notes |
|---|---|---|---|---|
| 1 | 1466893000 | 1 | CHARGER BATT. ONBOARD KIT 24V-40A 230V | [1] |
| 2 | 1466923000 | 1 | CHARGER ON BOARD 24V 40A 230V SIP | |
| 3 | 1466889000 | 1 | LIGHT FRONT KIT | [2] |
| 4 | 1466247000 | 1 | USB PORT KIT | [3] |
| 5 | 1466947000 | 1 | CABLE POWER SUPPLY UK L.3000MM SIP | [4] |
| 6 | 1466318000 | 1 | CABLE EXTENSION UK PLUG L.2000MM SIP | [5] |
| 7 | 9100000787 | 1 | CABLE EXTENSION EU PLUG L.2000 PKD | [5] |

Part Notes:

[1] - OPTIONAL - INST. INTR. 1466904000
[2] - OPTIONAL - INST. INTR. 1466899000
[3] - OPTIONAL - INST. INTR. 1466896000
[4] - OPTIONAL - NOT SHOWN
[5] - FOR EU/UK MACHINE

OPTIONAL - NOT SHOWN

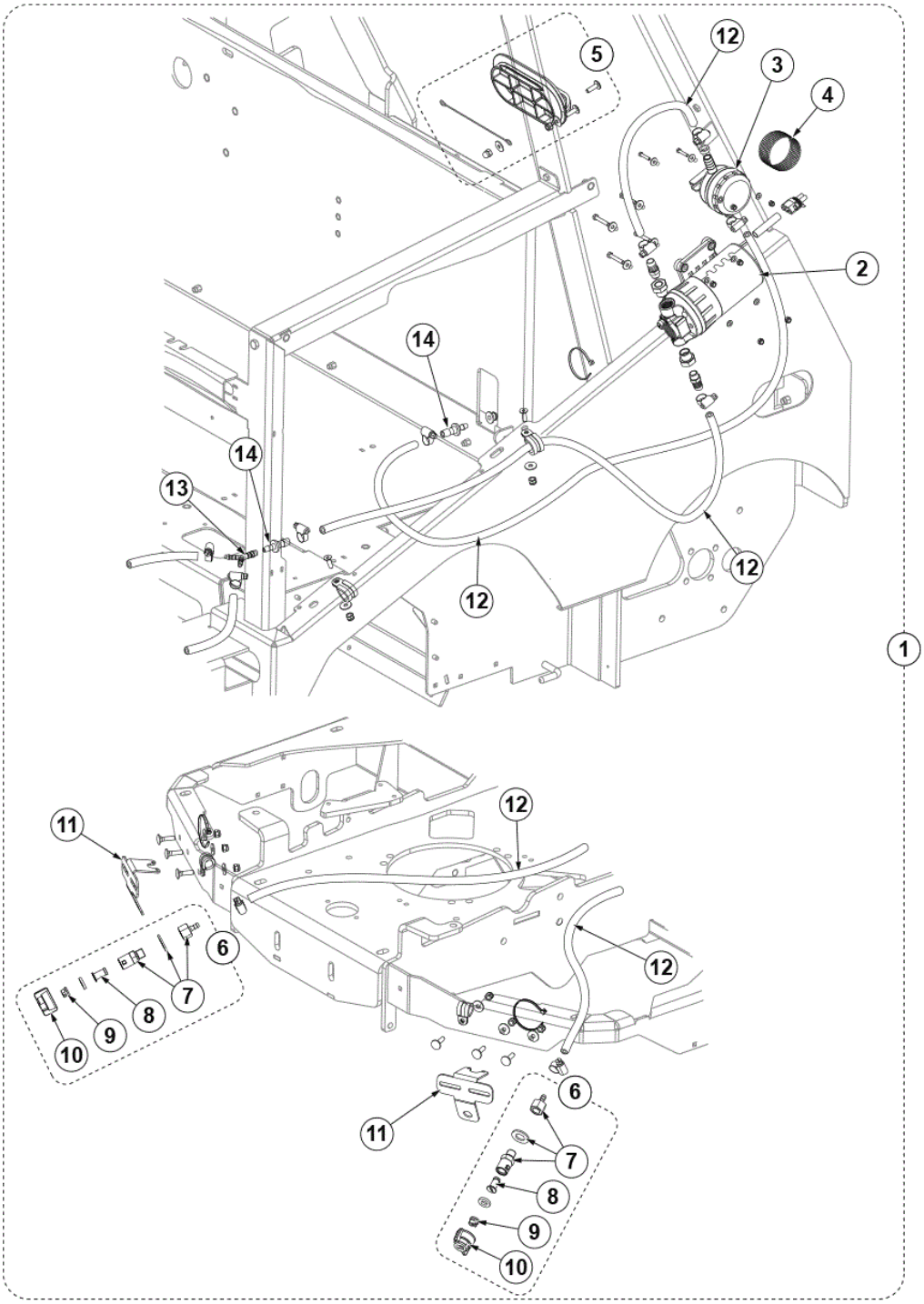
1
2
3
4
5
6
7
8
9
10
11
12
13
14

| Pos. | Artikel-Nr. | Menge | Variante | Notes |
|---|---|---|---|---|
| 1 | 1466890000 | 1 | DUSTGUARD KIT | [1] |
| | 1467987000 | 1 | DUSTGUARD VENTILATION RETROFIT KIT | |
| 2 | 1465647000 | 1 | PUMP WATER KIT | |
| 3 | 9100000860 | 1 | Wasserfilter | |
| 4 | 9100000861 | 1 | NET WATER FILTER REINFORCED PKD | |
| 5 | 1465355000 | 1 | CAP SOLUTION TANK KIT | |
| 6 | 33019324 | 2 | Düsen Spray Kit | |
| 7 | 33020865 | 2 | ADAPTER SPRAY KIT | |
| 8 | 1467245000 | 2 | Rueckschlagventil Filter | |
| 9 | 1467246000 | 2 | NOZZLE SPRAY D. 0.33 S.S. PKD | |
| 9 | 1467247000 | 2 | NOZZLE SPRAY D. 0.53 BRASS PKD | |
| 10 | 1467248000 | 2 | RING NUT QUICK COUPLING PKD | |
| 11 | 1467177000 | 2 | SUPPORT GALV. F NOZZLE SIP | |
| 12 | 1467178000 | 1 | HOSES F DUSTGUARD KIT | |
| 13 | 1467179000 | 1 | ELBOW Y D.6-8-6 2 PCS SET | |
| 14 | 1467180000 | 2 | FITTING STRAIGHT REDUCER 4 PCS SET | |

Part Notes:

[1] - OPTIONAL - INST. INSTR. 1466900000

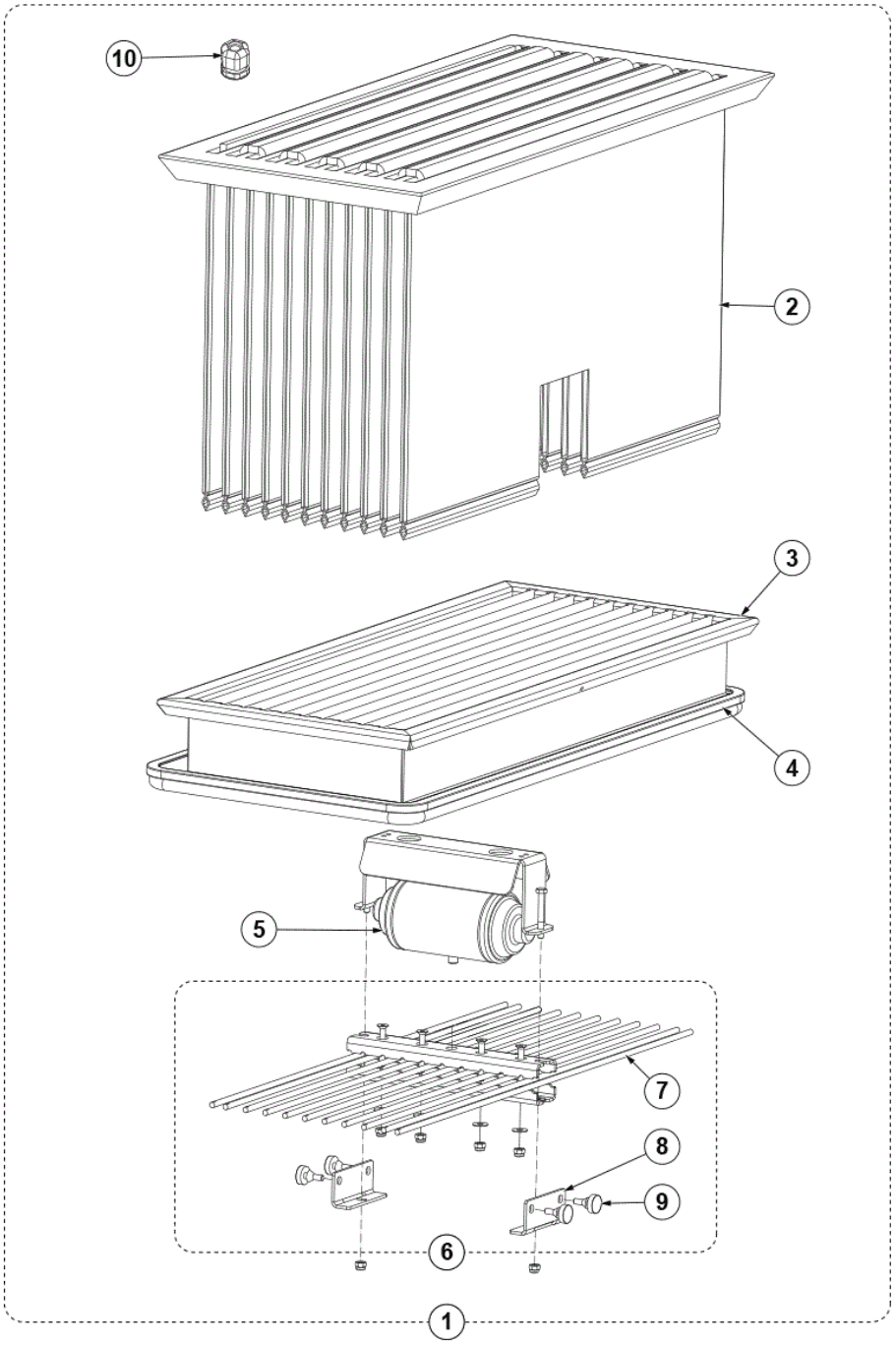
10
2
3
4
5
7
8
9
6
1

| Pos. | Artikel-Nr. | Menge | Variante | Notes |
|---|---|---|---|---|
| 1 | 1466885000 | 1 | FILTER POCKET KIT | [1] |
| 2 | 1466917000 | 1 | FILTER POCKET SIP | |
| 3 | 1466918000 | 1 | FRAME MET. BLACK F POCKET FILTER SIP | |
| 4 | 1466919000 | 1 | GASKET BULB REINFORCED L.2090MM SIP | |
| 5 | 146 2795 000 | 1 | Rüttelmotor f. SR 1100 S | |
| 6 | 1466922000 | 1 | HARDWARE POCKET FILTER RODS FIXING KIT | |
| 7 | 1466920000 | 1 | ROD MET. BLACK F POCKET FILTER KIT | |
| 8 | 1466921000 | 1 | HOLDER MET. F POCKET FILTER DAMPER KIT | |
| 9 | 1467006000 | 1 | PLUG ANTI VIBRATION D.8-D.20 10 PCS SET | |
| 10 | 9100001779 | 1 | GLAND CABLE PLASTIC W/NUT PG13.5 SIP | |

Part Notes:

[1] - ACCESSORY PRUNING 2020
OPTIONAL

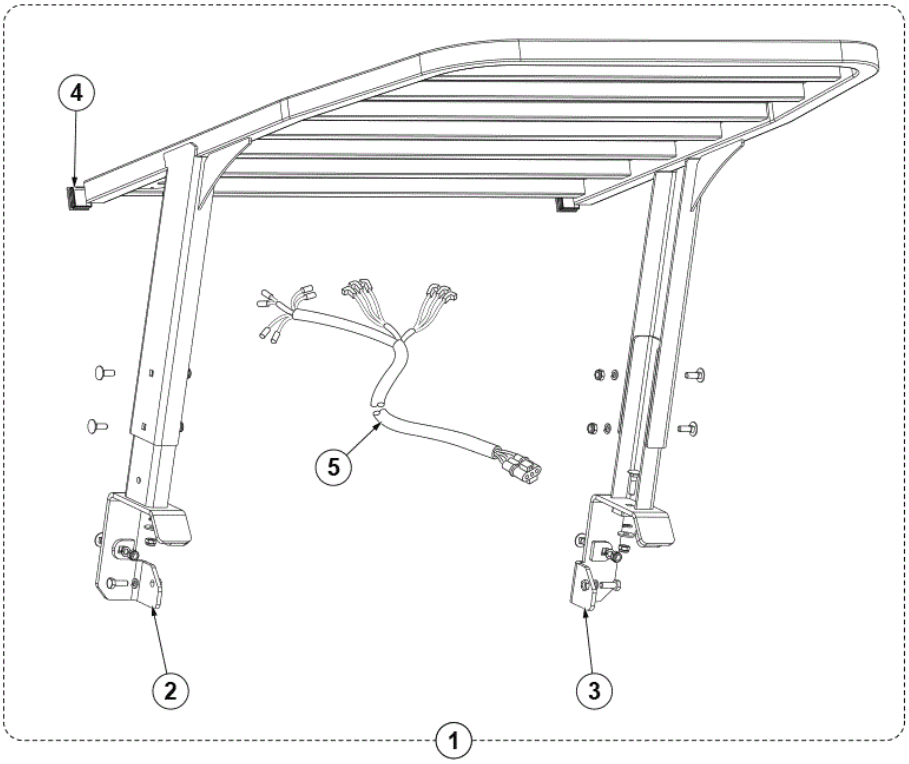
4
5
2
3
1

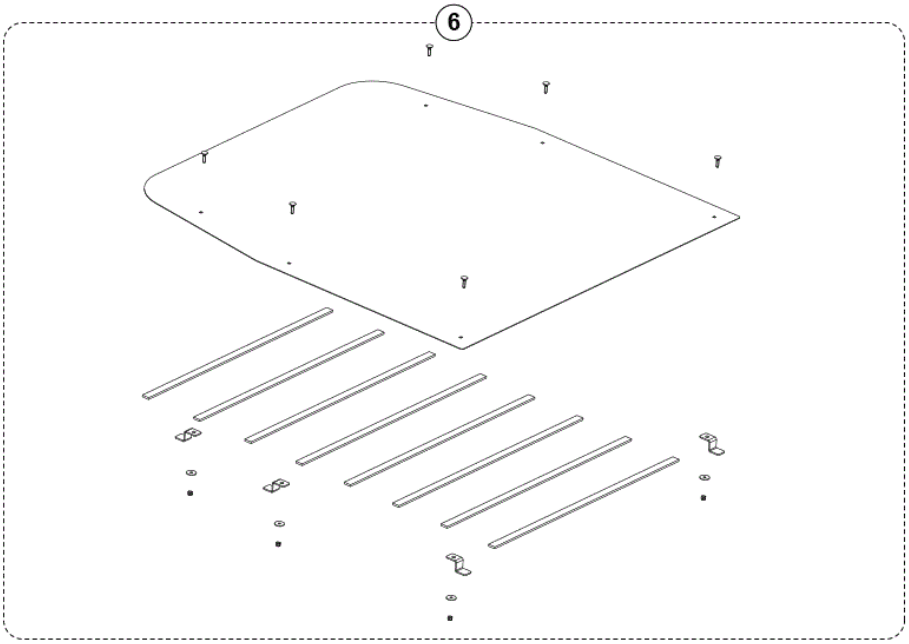
6

| Pos. | Artikel-Nr. | Menge | Variante | Notes |
|---|---|---|---|---|
| 1 | 1466096000 | 1 | GUARD OVERHEAD KIT | [1] |
| 2 | 1466924000 | 1 | SUPPORT RT F OHG MET. BLACK SIP | |
| 3 | 1466926000 | 1 | SUPPORT LT F OHG MET. BLACK SIP | |
| 4 | 1467084000 | 1 | CAP SQUARE 40X40 2 PCS SET | |
| 5 | 1467556000 | 1 | HARNESS F OHG SIP | |
| 6 | 1466886000 | 1 | CANOPY FOR OHG KIT | [2] |

Part Notes:

[1] - OPTIONAL - INST. INSTR. 1466894000
[2] - OPTIONAL - INST. INSTR. 1466895000

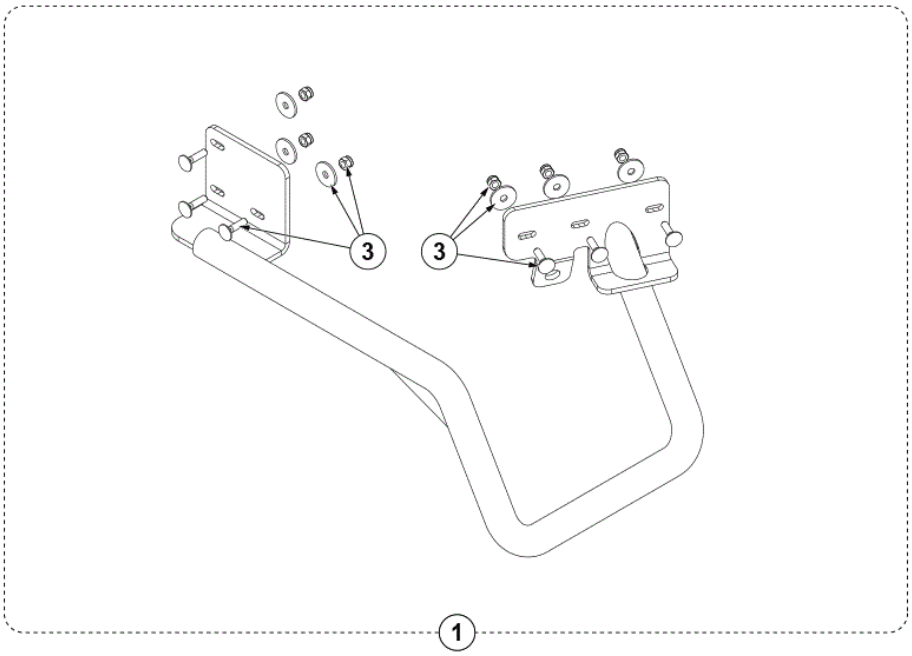


1

2

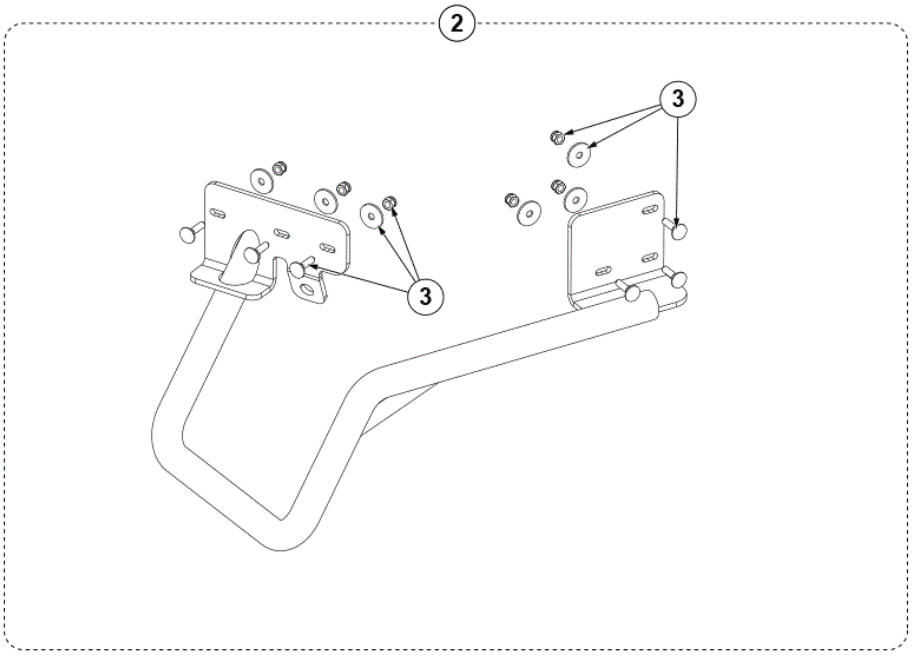

| Pos. | Artikel-Nr. | Menge | Variante | Notes |
|---|---|---|---|---|
| 1 | 1466891000 | 1 | GUARD RIGHT SIDE BROOM KIT | [1] |
| 2 | 1466892000 | 1 | GUARD LEFT SIDE BROOM KIT | [1] |
| 3 | 1466927000 | 2 | HARDWARE F SIDE BROOM GUARD KIT | |

Part Notes:

[1] - OPTIONAL - INST. INSTR. 1466901000

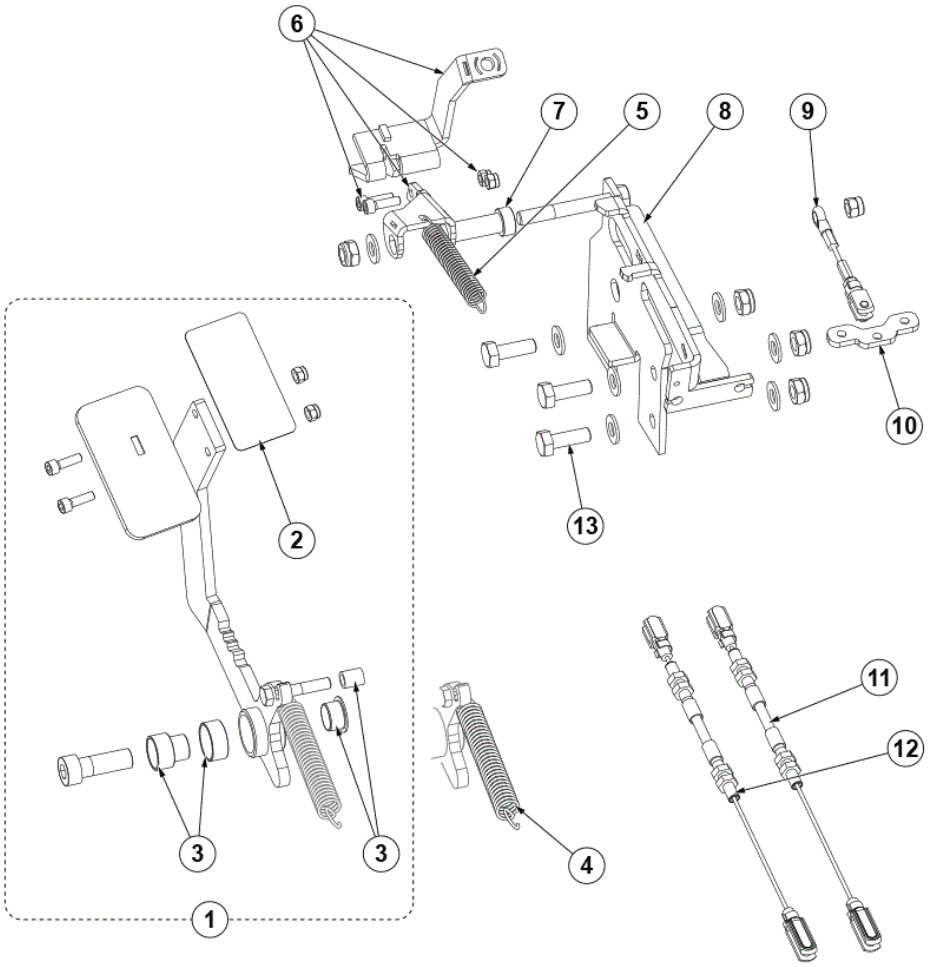
6
7
5
8
9
10
13
2
11
12
3
3
4
1

| Pos. | Artikel-Nr. | Menge | Variante | Notes |
|---|---|---|---|---|
| 1 | 1467599000 | 1 | PEDAL F BRAKE KIT | |
| 2 | 1466591000 | 1 | ANTI-SLIP SURFACING BLACK 50X95MM KIT | |
| 3 | 1466654000 | 1 | BUSHING F BRAKE PEDAL KIT | |
| 4 | 1467046000 | 1 | SPRING EXTENSION D.E.18 WIRE D.2 SIP | |
| 5 | 1467039000 | 1 | FEDERZUG AUS KOHLENSTOFFSTAHL SIP | |
| 6 | 1466660000 | 1 | PEDAL PARKING BRAKE KIT | |
| 7 | 1466877000 | 1 | SPACER FLANGED D.54X14 H.10.2 GALV.SIP | |
| 8 | 1466659000 | 1 | PLATE MET. BLACK F BRAKE PEDAL SUPP. SIP | |
| 9 | 1467598000 | 1 | TIE ROD PRIMARY BRAKE SIP | |
| 10 | 1466657000 | 1 | PLATE GALV. F BRAKES BALANCING SIP | |
| 11 | 1466655000 | 1 | WIRE F RT BRAKE SIP | |
| 12 | 1466656000 | 1 | WIRE F LT BRAKE SIP | |
| 13 | 1466661000 | 1 | HARDWARE F BRAKE PEDAL KIT | |

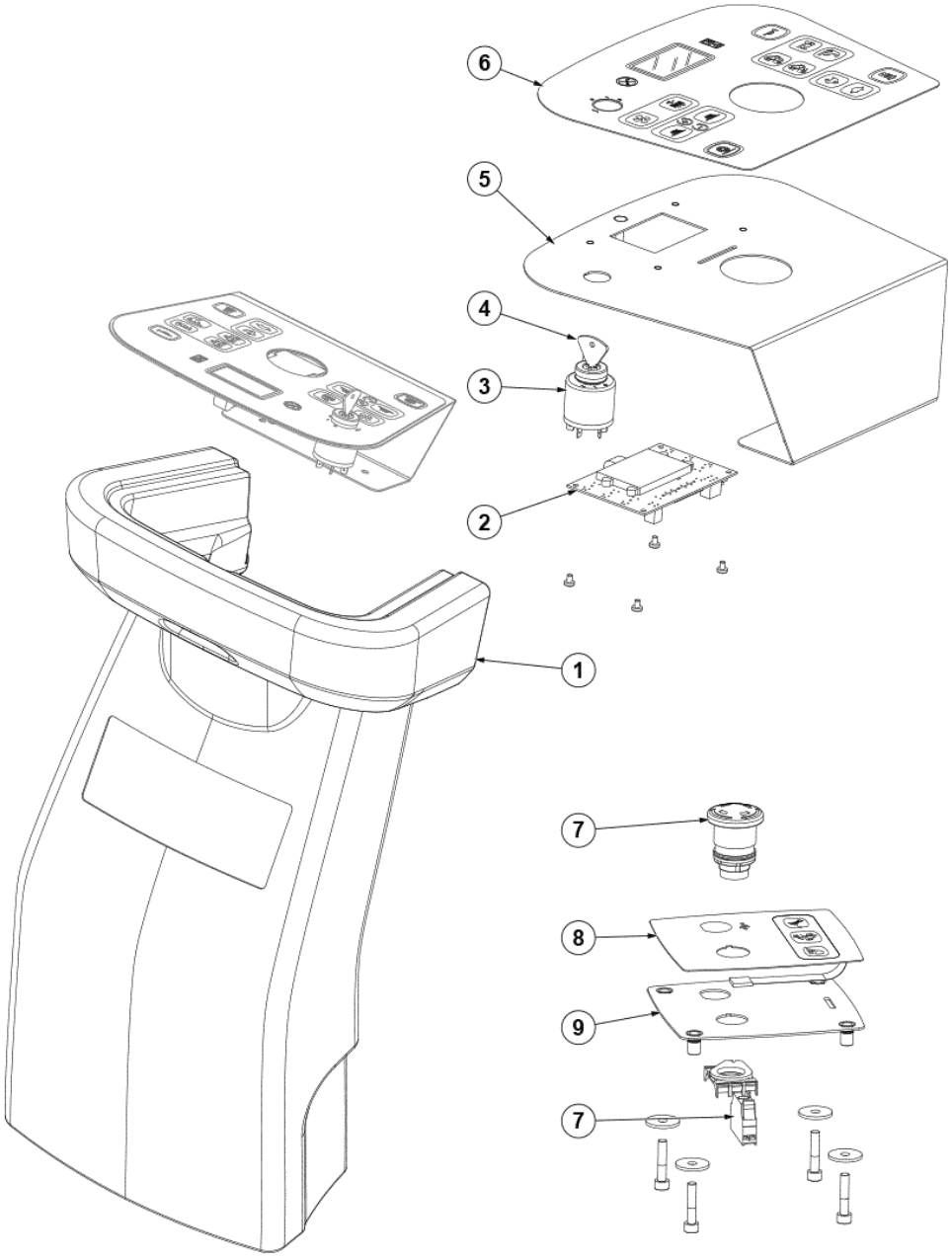
6
5
4
3
2
1
7
8
9
7

| Pos. | Artikel-Nr. | Menge | Variante | Notes |
|---|---|---|---|---|
| 1 | 1466677000 | 1 | COLUMN PLASTIC GREY SIP | |
| 2 | 1466681000 | 1 | CONTROLLER DISPLAY SIP | |
| 3 | 33020442 | 1 | Schlüsselschalter | |
| 4 | 1467014000 | 1 | KEY F STARTER SWITCH 2 PCS SET | |
| 5 | 1466682000 | 1 | PLATE MET. BLACK F MAIN DASHBOARD SIP | |
| 6 | 1467765000 | 1 | Armaturenbrett Bedienfeld schwarz SIP | |
| 7 | 1466683000 | 1 | Sicherheitsschalter | |
| 8 | 1467766000 | 1 | Display | |
| 9 | 1466685000 | 1 | PLATE MET. BLACK F SIDE DASHBOARD SIP | |
| NS | 1467959000 | 1 | DECAL SW5500 KIT | |
| NS | 1467960000 | 1 | DECAL ADVANCE SW5500 KIT | |

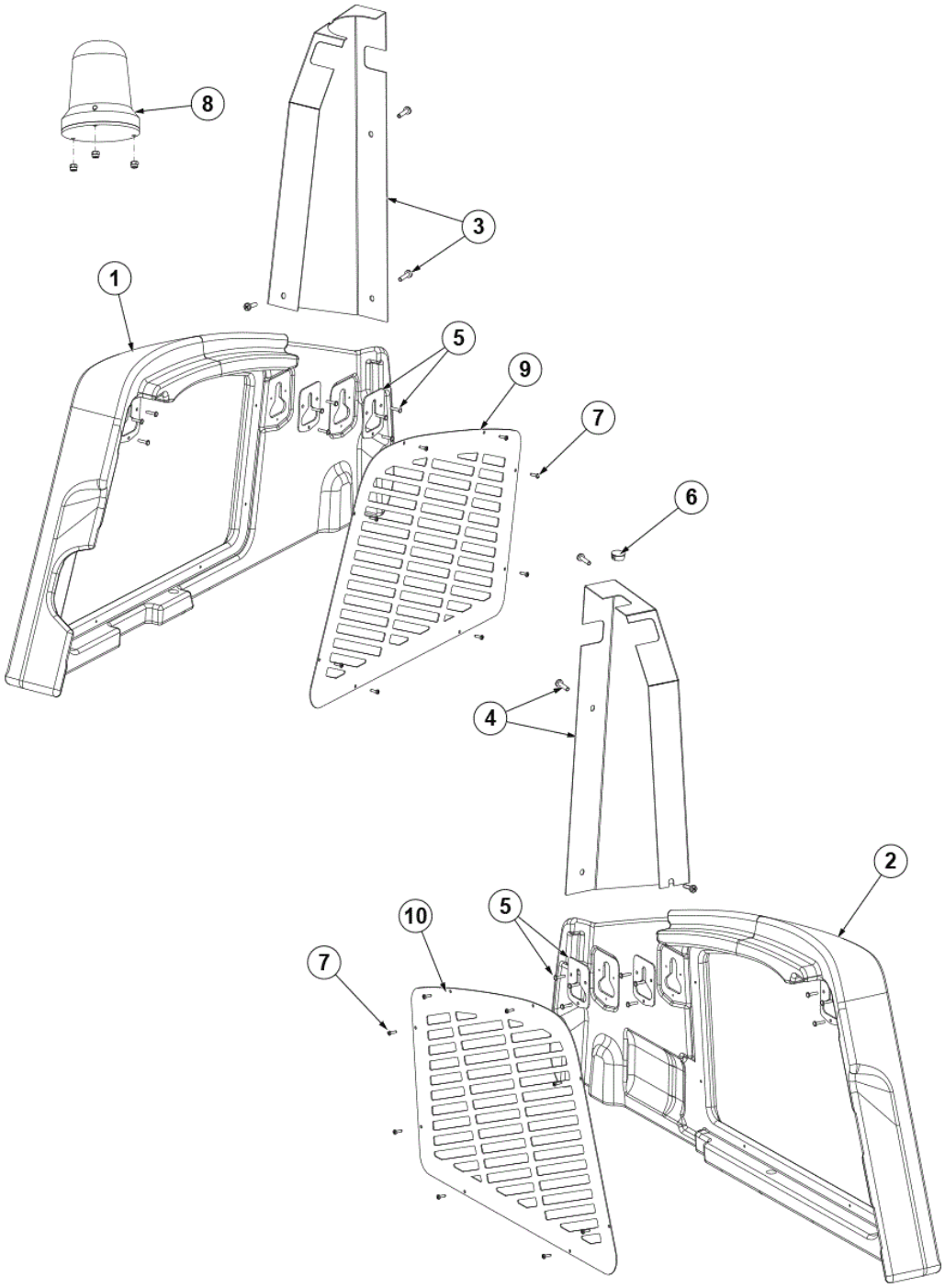
8
3
1
5
9
7
6
4
2
10
5
7

| Pos. | Artikel-Nr. | Menge | Variante | Notes |
|---|---|---|---|---|
| 1 | 1466844000 | 1 | COVER RT PLASTIC GREY KIT | |
| 2 | 1466843000 | 1 | COVER LT PLASTIC GREY KIT | |
| 3 | 1466841000 | 1 | COVER METALLIC BLACK RT SHOULDER KIT | |
| 4 | 1466840000 | 1 | COVER METALLIC BLACK LT SHOULDER KIT | |
| 5 | 1466842000 | 6 | PLATE F SIDE PANEL FIXING KIT | |
| 6 | 1467027000 | 1 | PLUG DOME PLASTIC BLACK D.22.6 SIP | |
| 7 | 1467008000 | 2 | SCREW 3.5X12 PAN PHIL W/O BIT 10 PCS SET | |
| 8 | 1464948000 | 1 | Warnleuchte | |
| 9 | 1466794000 | 1 | GRID SIDE  MET. BLACK KIT | |
| 10 | 1466794000 | 1 | GRID SIDE  MET. BLACK KIT | |
| NS | 1467959000 | 1 | DECAL SW5500 KIT | |
| NS | 1467960000 | 1 | DECAL ADVANCE SW5500 KIT | |

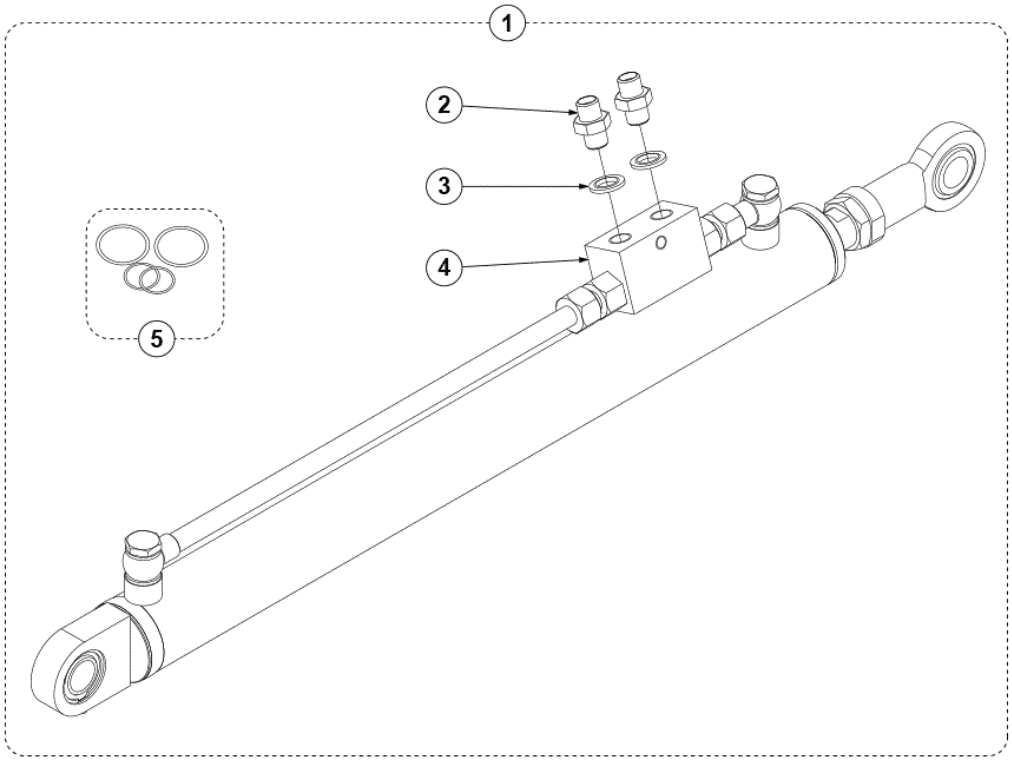
1
2
3
4
5

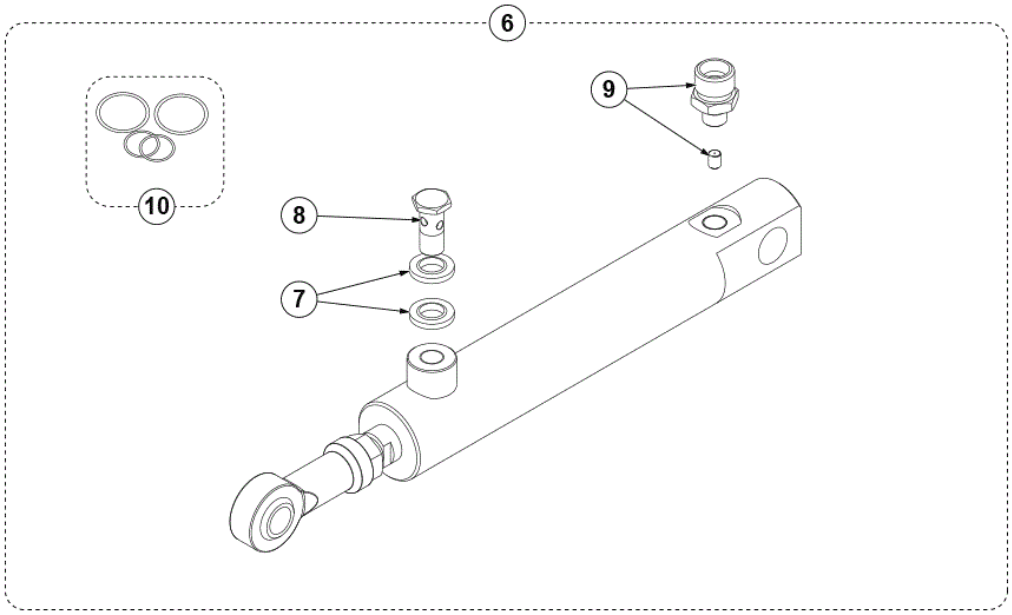
6
9
10
8
7

| Pos. | Artikel-Nr. | Menge | Variante | Notes |
|---|---|---|---|---|
| 1 | 1466790000 | 1 | CYLINDER HYDRAULIC 40/25/470 CPL KIT | |
| 2 | 1467011000 | 1 | NIPPLE 1/4 4 PCS SET | |
| 3 | 1467007000 | 1 | SEAL BONDED 1/4 10 PCS SET | |
| 4 | 1467054000 | 1 | VALVE BLOCK SIP | |
| 5 | 1466553000 | 1 | SEAL HYDRAULIC CYLINDER 40/25/470 KIT | |
| 6 | 1466723000 | 1 | CYLINDER HYDRAULIC 25/16/120 CPL KIT | |
| 7 | 1467004000 | 1 | SEAL BONDED 1/8 10 PCS SET | |
| 8 | 1467015000 | 1 | BANJO BOLT 1/8 L.22 SPEC. 2 PCS SET | |
| 9 | 1466791000 | 1 | FITTING 1/8 GAS WITH CAIBRATED DOWEL KIT | |
| 10 | 1466552000 | 1 | SEAL HYDRAULIC CYLINDER 25/16/120 KIT | |

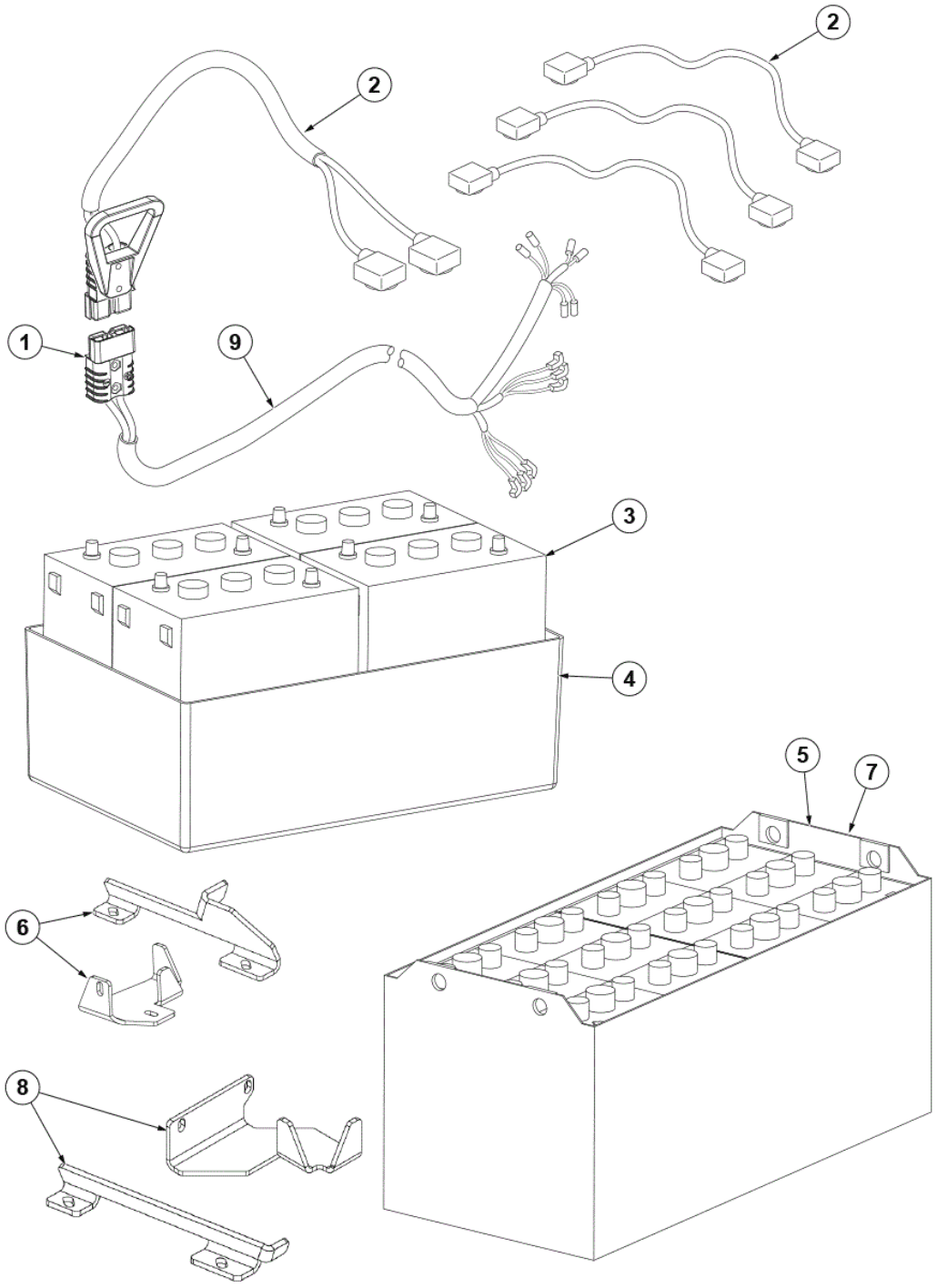
2
2
1
9
3
4
5
7
6
8

| Pos. | Artikel-Nr. | Menge | Variante | Notes |
|---|---|---|---|---|
| 1 | 1467029000 | 2 | CONNECTOR 175A RED PKD | |
| 2 | 1467526000 | 1 | HARNESS F BATTERY KIT | [1] |
| 2 | 1467648000 | 3 | HARNESS BATTERY US SIP | [2] |
| 3 | 80564100 | 4 | Gelbatterie Monoblock, 6V-240 Ah | [3] |
| 3 | 80565000 | 4 | Nassbatterie Semi T Monoblock, 6V-255 Ah | [3] |
| 4 | 1467475000 | 1 | BATTERY TRAY 630X420 | [4] |
| 5 | 80565300 | 1 | Gelbatt. 24V-330Ah, Einzelzellen im Tray | [3] |
| 5 | 80565200 | 1 | Batterie 24V-360 Ah m. Aquamatic im Tray | [3] |
| 6 | 1465750000 | 1 | BATTERY FIXING 360Ah BATTERY TRAY KIT | [5] |
| 7 | 80562448 | 1 | BATT.24V-480Ah WET in tray - Aquamatic | [3] |
| 7 | 80562442 | 1 | BATT.24V-420Ah GEL Single Cells in tray | [3] |
| 8 | 1466420000 | 1 | Batteriebefestigung 420 Gel /480 Nass Ah | [6] |
| 9 | 1466871000 | 1 | HARNESS MACHINE BATTERY VERSION EU SIP | |
| 9 | 1467292000 | 1 | HARNESS MACHINE BATTERY VERSION US SIP | |

Part Notes:

[1] - FOR EU MODEL
[2] - FOR US MODEL
[3] - OPTIONAL
[4] - OPTIONAL - USE FOR MONOBLOCK BATTERY
[5] - OPTIONAL - USE SMALL STEEL TRAY
[6] - OPTIONAL - USE FOR LARGE STEEL TRAY

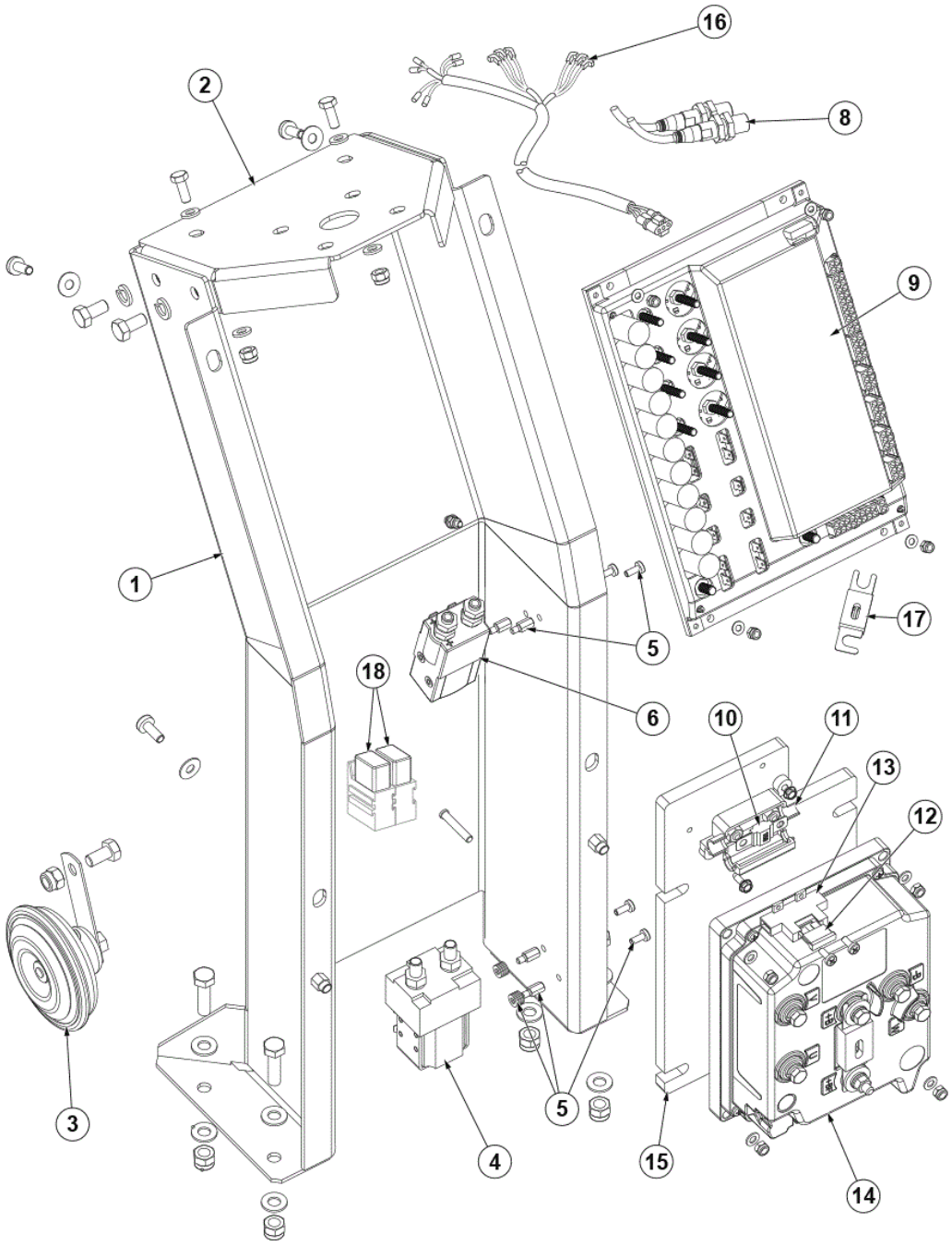
16
2
8
9
1
17
5
18
6
10
11
13
12
3
5
4
15
14

| Pos. | Artikel-Nr. | Menge | Variante | Notes |
|---|---|---|---|---|
| 1 | 1466648000 | 1 | COLUMN METALLIC BLACK F STEERING SIP | |
| 2 | 1466651000 | 1 | PLATE UPPER STEERING COLUMN MET. SIP | |
| 3 | 1467032000 | 1 | HORN 24V 112DB SIP | |
| 4 | 1466644000 | 1 | CONTACTOR 24V 200A SIP | |
| 5 | 1466643000 | 1 | HARDWARE F HIGH CONTACTOR FIXING KIT | |
| 6 | 1466645000 | 1 | CONTACTOR 24V 100A SIP | |
| 8 | 1468013000 | 2 | SENSOR BACK UP PROXIMITY | |
| 9 | 9100001879 | 1 | CONTROLLER MAIN MACHINE KIT | [1] |
| 10 | 1466652000 | 1 | FUSE BOLT DOWN 150A SIP | |
| 11 | 1465073000 | 1 | HOLDER FUSE KIT | |
| 12 | 1467034000 | 1 | FUSE BLADE 10A PKD | |
| 13 | 1467035000 | 1 | HOLDER FUSE THERMOPL.UL 94-V0 SIP | [2] |
| 14 | 1466649000 | 1 | Fahrelektronik 24V 240A A.C. SIP | |
| 15 | 1466650000 | 1 | PLATE TRAC. BOARD HEAT SINK ALLUM. SIP | |
| 16 | 1467551000 | 1 | HARNESS STEERING COLUMN SIP | |
| 17 | 1467241000 | 1 | FUSE BOLT-DOWN 160A SIP | |
| 18 | 146 1646 000 | 2 | RELAY 24V | |

Part Notes:

[1] - SEE TSB-FC-2017-064

DE TSB-FC-2017-064 SW5500 Hauptsteuerungsfehler G7

[2] - ONLY FOR DRIVE

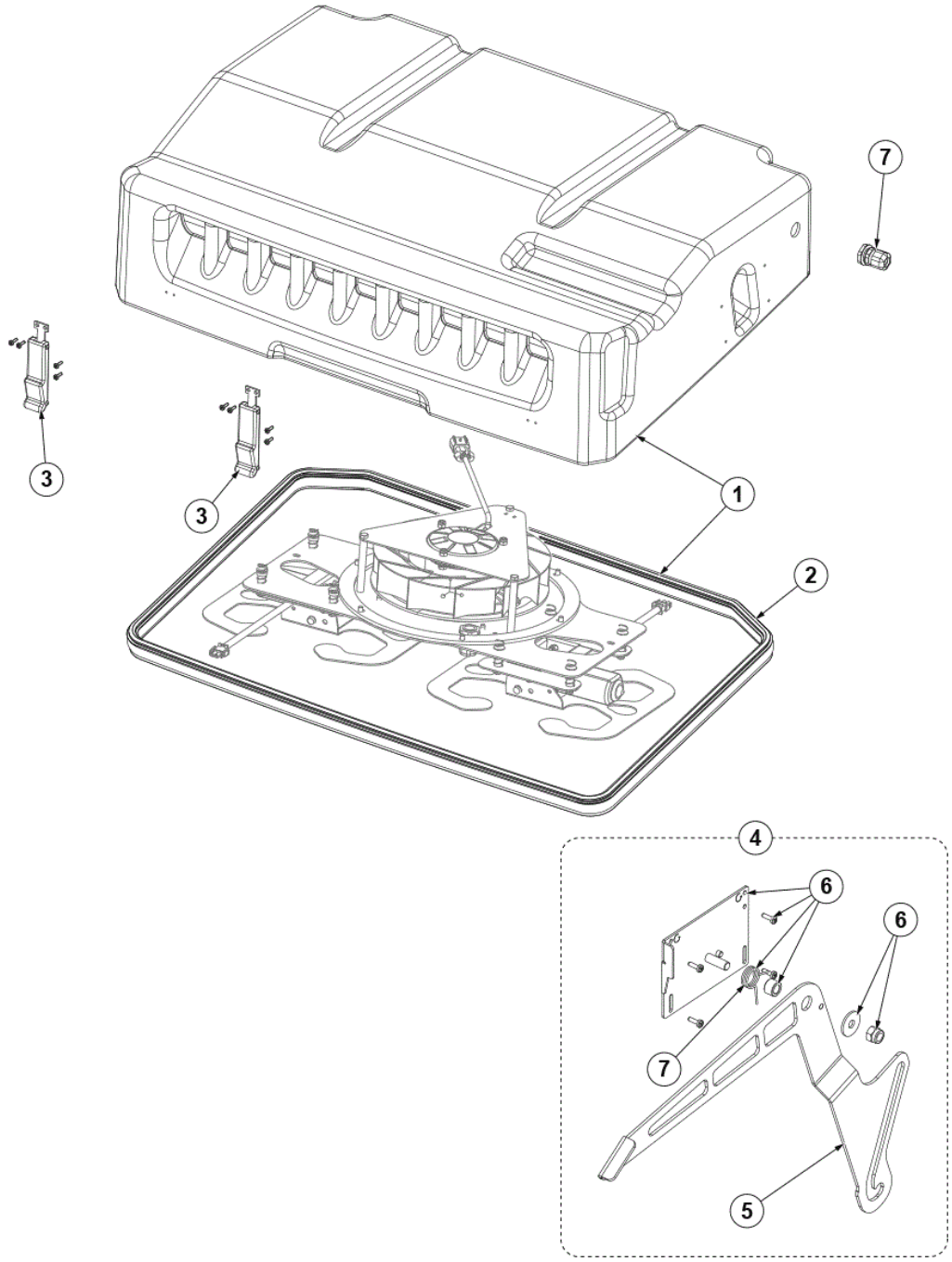
7
3
3
1
2
4
6
6
7
5

| Pos. | Artikel-Nr. | Menge | Variante | Notes |
|---|---|---|---|---|
| 1 | 1466853000 | 1 | SUPPORT PLASTIC GREY F FAN KIT | |
| 2 | 1466855000 | 1 | GASKET BULB RUBBER L. 2390MM PKD | |
| 3 | 1467042000 | 2 | LATCH RUBBER PKD | |
| 4 | 1466856000 | 1 | LEVER F FAN HOLDER BLOCK KIT | |
| 5 | 1466869000 | 1 | LEVER GALV. F FAN HOLDER RETAINER SIP | |
| 6 | 1466870000 | 1 | PLATE GALV. F FAN HOLDER RETAINER KIT | |
| 7 | 1467038000 | 1 | PEDAL SPRING PKD | |
| 8 | 9100001779 | 1 | GLAND CABLE PLASTIC W/NUT PG13.5 SIP | |

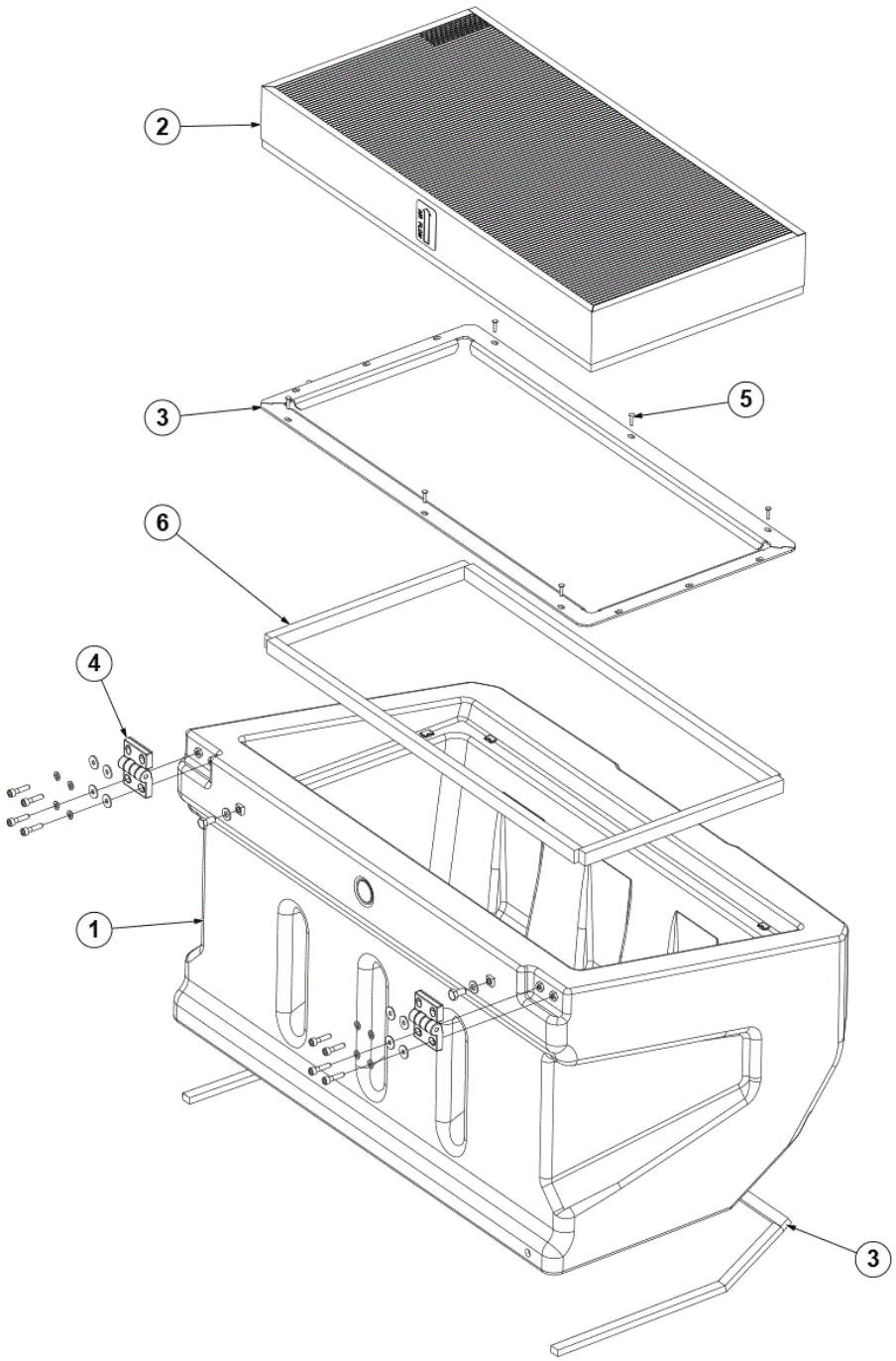
2
3
5
6
4
1
3

| Pos. | Artikel-Nr. | Menge | Variante | Notes |
|---|---|---|---|---|
| 1 | 1466835000 | 1 | SUPPORT PLASTIC BLACK F VAC FILTER KIT | |
| 1 | 1466834000 | 1 | TANK SUPPORT PLASTIC F VAC FILTER KIT | [1] |
| 2 | 1467174000 | 1 | FILTER PANEL PAPER ULTRA WEB | |
| 2 | 1467173000 | 1 | FILTER PANEL POLYESTER ULTRA WEB | [2] |
| 3 | 1466836000 | 1 | SUPPORT PLAIN GALV. F FILTER KIT | |
| 4 | 9098329000 | 1 | Schanier Kit | |
| 5 | 9100003009 | 1 | SCREW 3.9X22 SELF C/SUNK PH SS 10PCS SET | |
| 5 | 9100003009 | 1 | SCREW 3.9X22 SELF C/SUNK PH SS 10PCS SET | |
| 6 | 1467077000 | 1 | GASKETS ADHESIVE 22X20 KIT | |

Part Notes:

[1] - ONLY FOR MODELS WITH THE DUSTGUARD KIT
[2] - OPTIONAL

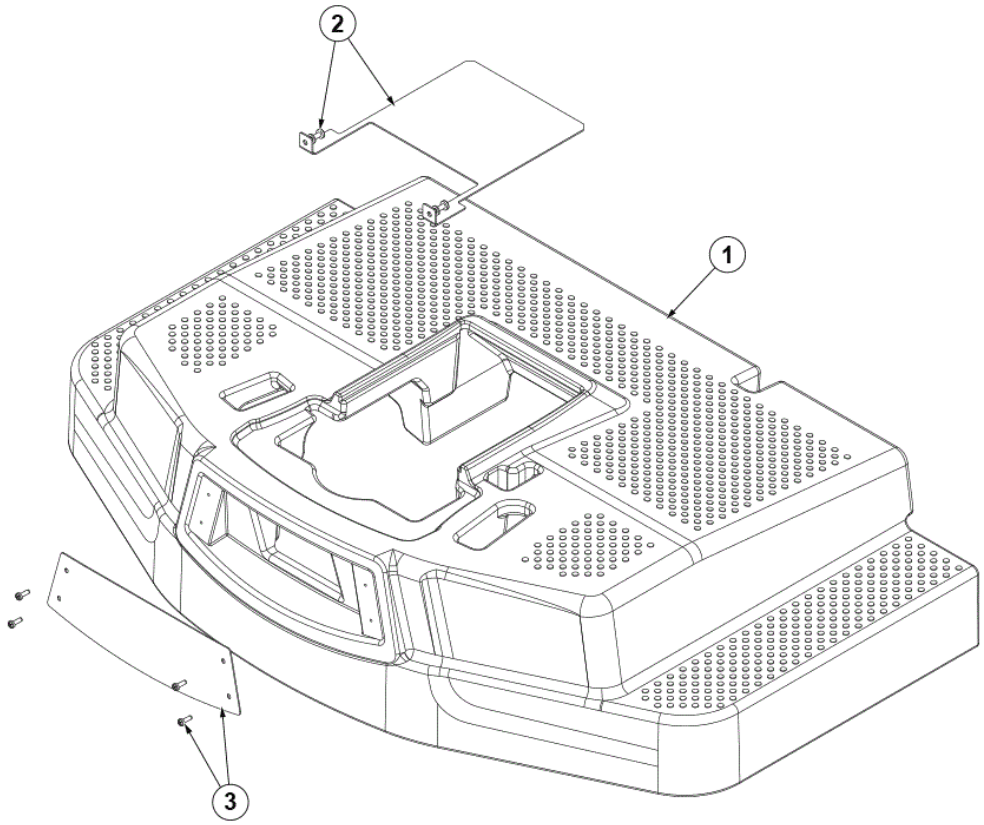
2
1
3

| Pos. | Artikel-Nr. | Menge | Variante | Notes |
|---|---|---|---|---|
| 1 | 1466852000 | 1 | FOOTBOARD PLASTIC BLACK KIT | |
| 2 | 1466847000 | 1 | PLATE MET. F FOOTBOARD INSPECTION KIT | |
| 3 | 1466848000 | 1 | PLATE MET. BLACK FRONT F FOOTBOARD KIT | |

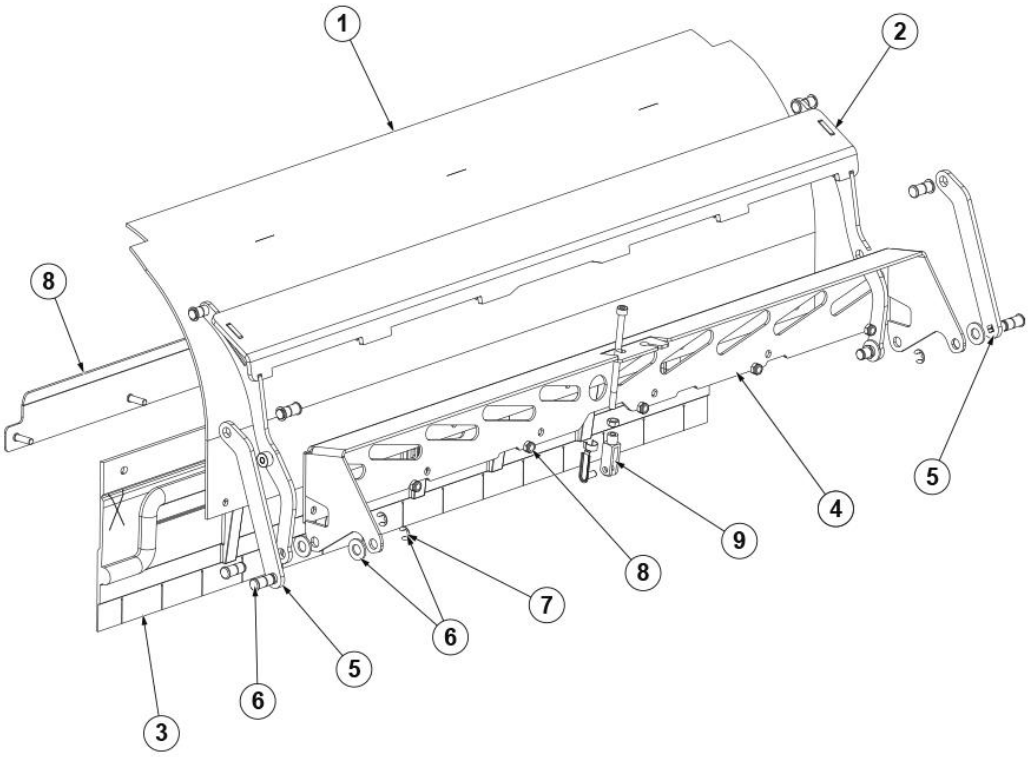
1
2
8
4
5
9
8
7
6
5
6
3

| Pos. | Artikel-Nr. | Menge | Variante | Notes |
|---|---|---|---|---|
| 1 | 1466605000 | 1 | WALL MOBILE LOWER BLACK RUBBER SIP | |
| 2 | 1466609000 | 1 | SUPPORT PRIMARY GALV. F FRONT SKIRT SIP | |
| 3 | 1466606000 | 1 | Gummilippe vorne schwarz PKD | |
| 4 | 1466603000 | 1 | SUPPORT GALV. F FRONT SKIRT SIP | [1] |
| 4 | 1467576000 | 1 | SUPPORT GALV. F FRONT SKIRT SIP | [2] |
| 5 | 1466604000 | 2 | PLATE SECONDARY GALV. F FRONT SKIRT KIT | |
| 6 | 1466607000 | 1 | PINS D10 FRONT SKIRT SUPPORT FIXING KIT | |
| 7 | 1466608000 | 1 | SEEGER RING D.7 DIN6799 10 PCS SET | |
| 8 | 1466602000 | 1 | PLATTE GALV. F FRONTSCHÜRZENSATZ | |
| 9 | 1467176000 | 1 | STOP F FRONT SKIRT KIT | |

Part Notes:

[1] - Until S/N 3810172000033
[2] - Starting from S/N 3810172000034

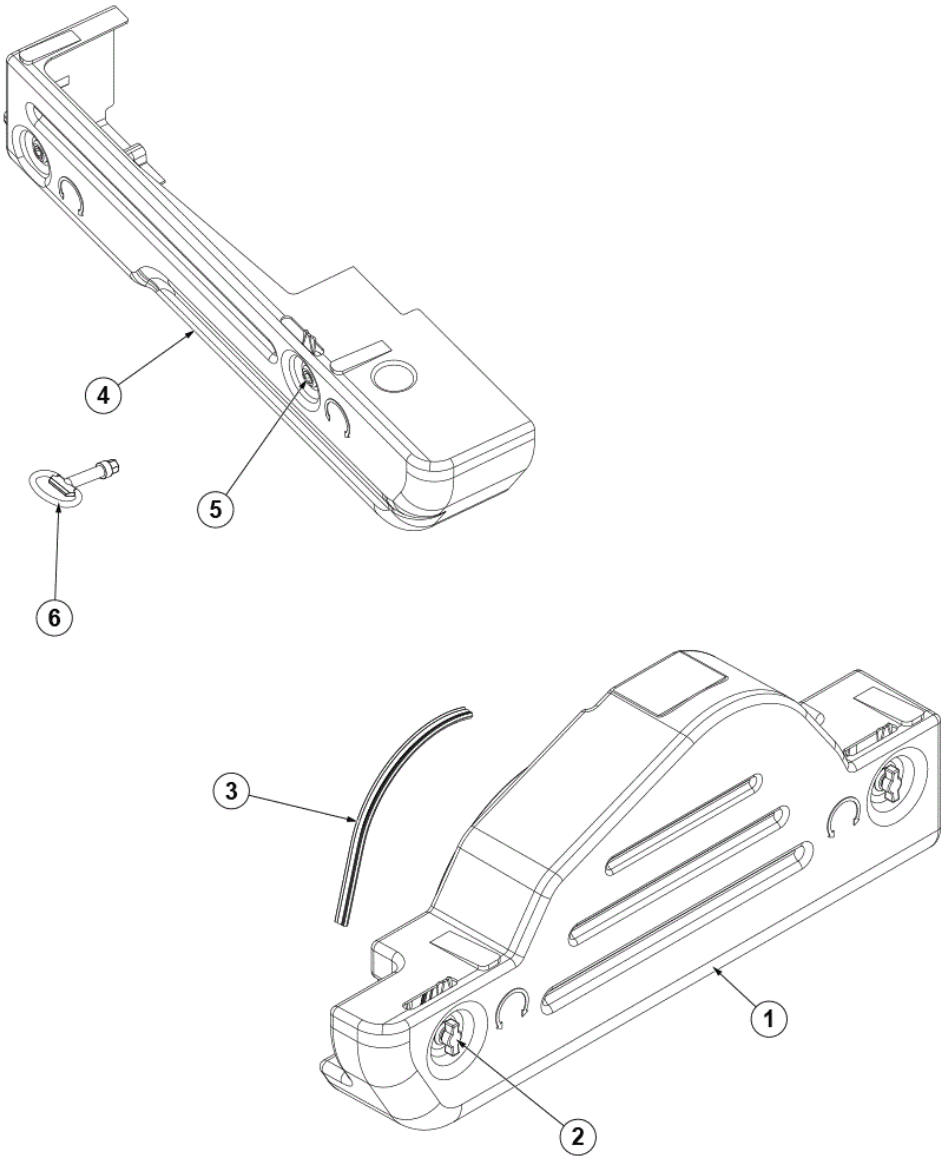
4
5
6
3
1
2

| Pos. | Artikel-Nr. | Menge | Variante | Notes |
|---|---|---|---|---|
| 1 | 1466849000 | 1 | HATCH LOWER BLACK LT SIDE KIT | |
| 2 | 1467041000 | 2 | LOCK PKD | |
| 3 | 1466850000 | 1 | GASKET BULB RUBBER L.415MM SIP | |
| 4 | 1466851000 | 1 | HATCH LOWER BLACK RT SIDE KIT | |
| 5 | 1467109000 | 1 | LOCK WITH KEY FOR HATCH PKD | |
| 6 | 1467057000 | 1 | KEY HEX 10MM MALE PKD | |

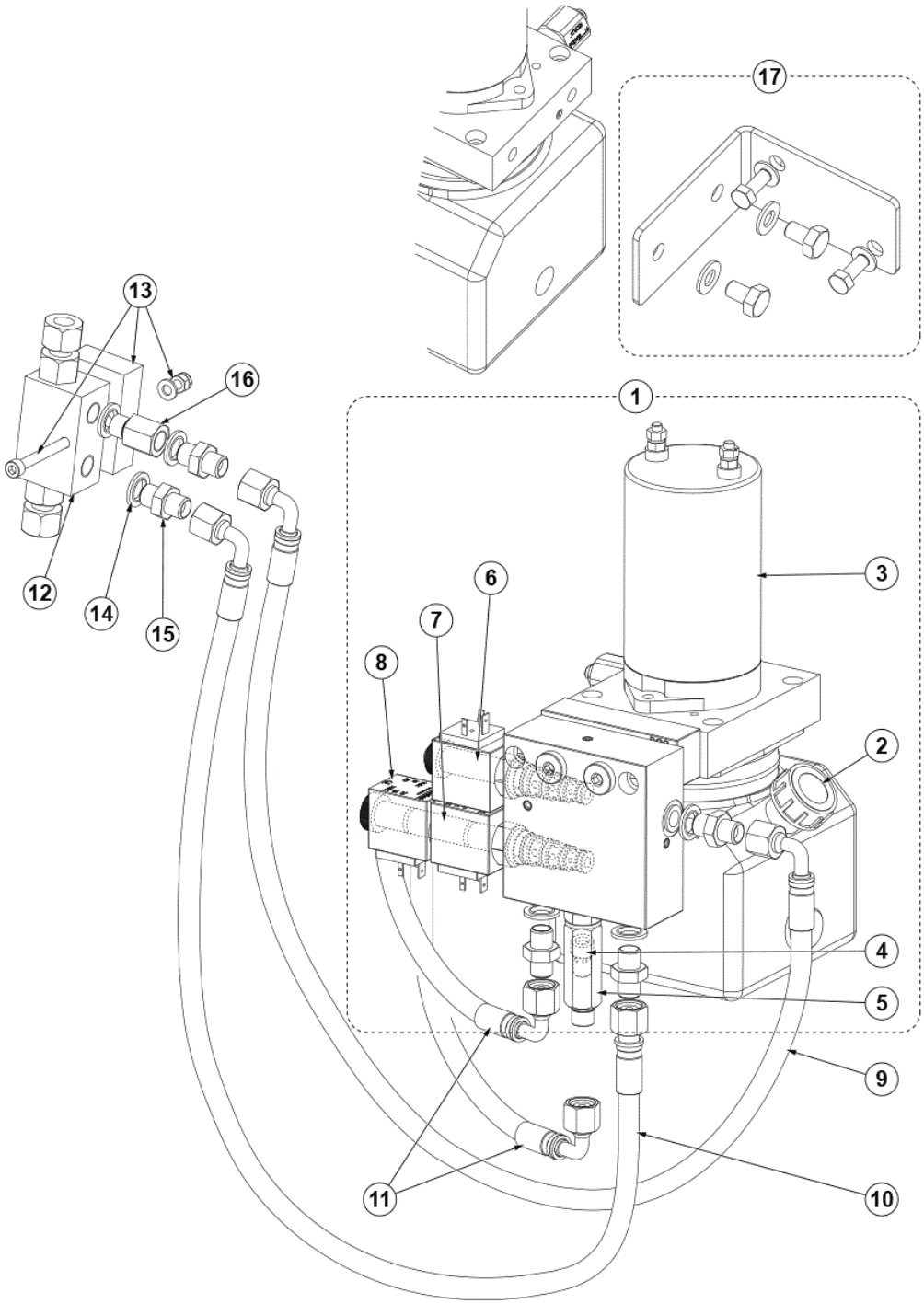
17
13
16
1
12
14
15
6
7
8
3
2
4
5
9
11
10

| Pos. | Artikel-Nr. | Menge | Variante | Notes |
|---|---|---|---|---|
| 1 | 1466712000 | 1 | GEARCASE HYDRAULIC 24V 800W 1CC SIP | |
| 2 | 1467213000 | 1 | CAP PRESSURE D19 SIP | |
| 3 | 1467242000 | 1 | MOTOR ELECTRIC 24V 800W SIP | |
| 4 | 1467209000 | 1 | VALVE FLOW CONTROL 5L/MIN 1/4 GAS SIP | |
| 5 | 1467243000 | 1 | STUD BOLT M/F 1/4 BSP ES. 19 SIP | |
| 6 | 1467211000 | 1 | CARTRIDGE SOLENOID VALVE 4/2 SIP | |
| 7 | 1467212000 | 1 | CARTRIDGE SOLENOID VALVE 4/3 SIP | |
| 8 | 1467210000 | 3 | SOLENOID 24V 18W N-H13 SIP | |
| 9 | 1466709000 | 1 | HOSE HYDRAULIC 1/4 R1AT L.780MM SIP | |
| 10 | 1466710000 | 1 | HOSE HYDRAULIC 1/4 R1AT L.680MM SIP | |
| 11 | 1466711000 | 2 | HOSE HYDRAULIC 1/4 R1AT L.600MM SIP | |
| 12 | 1467054000 | 1 | VALVE BLOCK SIP | |
| 13 | 1466707000 | 1 | SPACER F VALVE PLASTIC BLACK KIT | |
| 14 | 1467007000 | 1 | SEAL BONDED 1/4 10 PCS SET | |
| 15 | 1467011000 | 1 | NIPPLE 1/4 4 PCS SET | |
| 16 | 1467679000 | 1 | ADAPTER M/F STRAIGHT 1/4 L.21MM HX19 SIP | |
| 17 | 1466708000 | 1 | BRACKET MET. F HYDRAULIC GEARCASE KIT | |

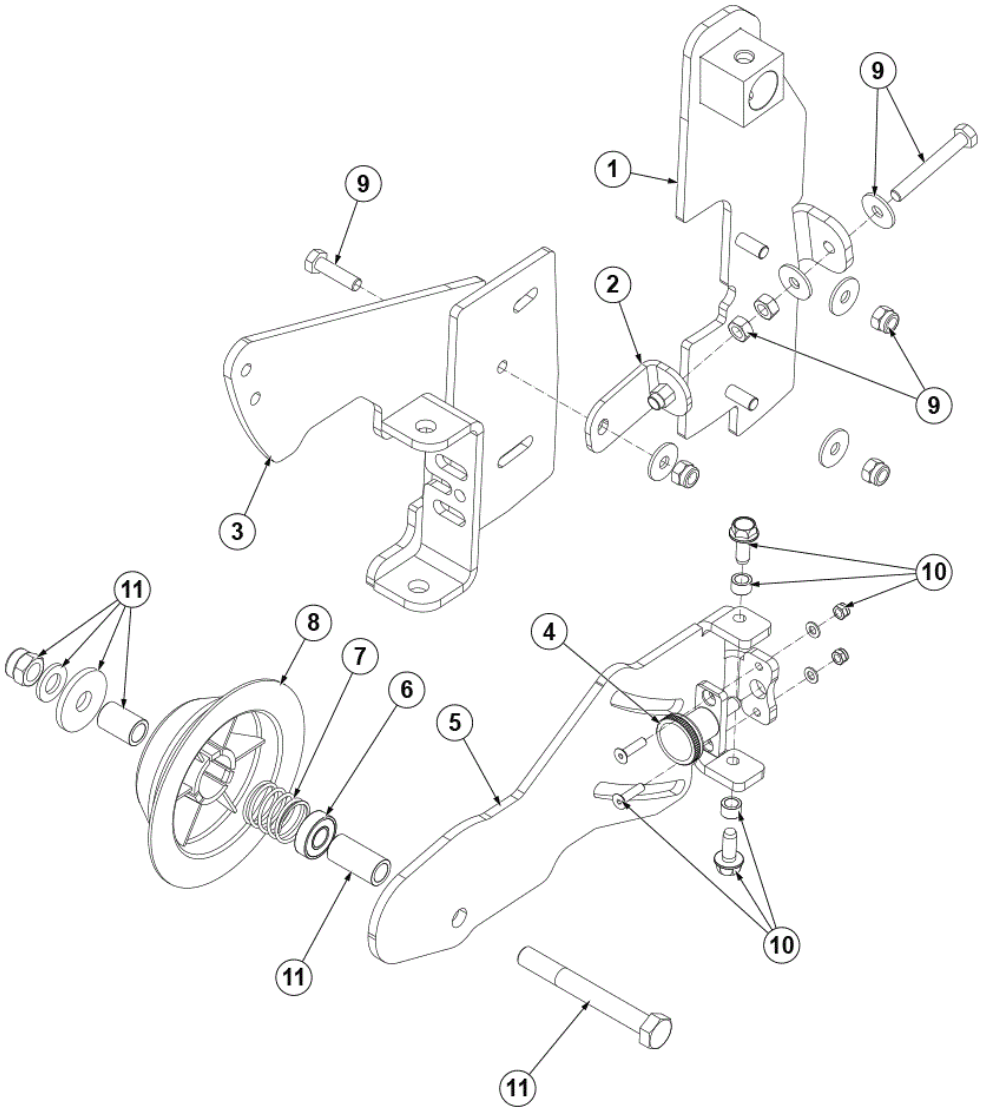
9
1
9
2
9
3
10
11
8
7
6
5
4
10
11
11

| Pos. | Artikel-Nr. | Menge | Variante | Notes |
|---|---|---|---|---|
| 1 | 1466625000 | 1 | ARM LT GALV. F MAIN BROOM FIXED SIP | |
| 2 | 1466627000 | 1 | PLATE GALV. F MAIN BROOM SETTING SIP | |
| 3 | 1466626000 | 1 | ARM LT GALV. F MAIN BROOM MOBILE SIP | |
| 4 | 1466623000 | 1 | PLUNGER INDEXING WITH FLANGE SIP | |
| 5 | 1466621000 | 1 | RACKET GALV. F HAUPT BR. INSPEKTION SIP | |
| 6 | 44905699 | 1 | BEARING BALL 6001 2RS PKD | |
| 7 | 1467024000 | 1 | SPRING PKD | |
| 8 | 1467023000 | 1 | HUB LEFT MAIN BROOM PKD | |
| 9 | 1466624000 | 1 | HARDWARE F MAIN BROOM LT ARM KIT | |
| 10 | 1466622000 | 1 | HARDWARE F MAIN BR. INSPECT. HALTERUNGSS | |
| 11 | 1466620000 | 1 | HARDWARE F IDLE HUB KIT | [1] |

Part Notes:

[1] - TSB-FC-2019-035 SW5500 Main Broom Hub

DE TSB-FC-2019-035 SW5500 Verbesserte Hauptkehrwalzenführung

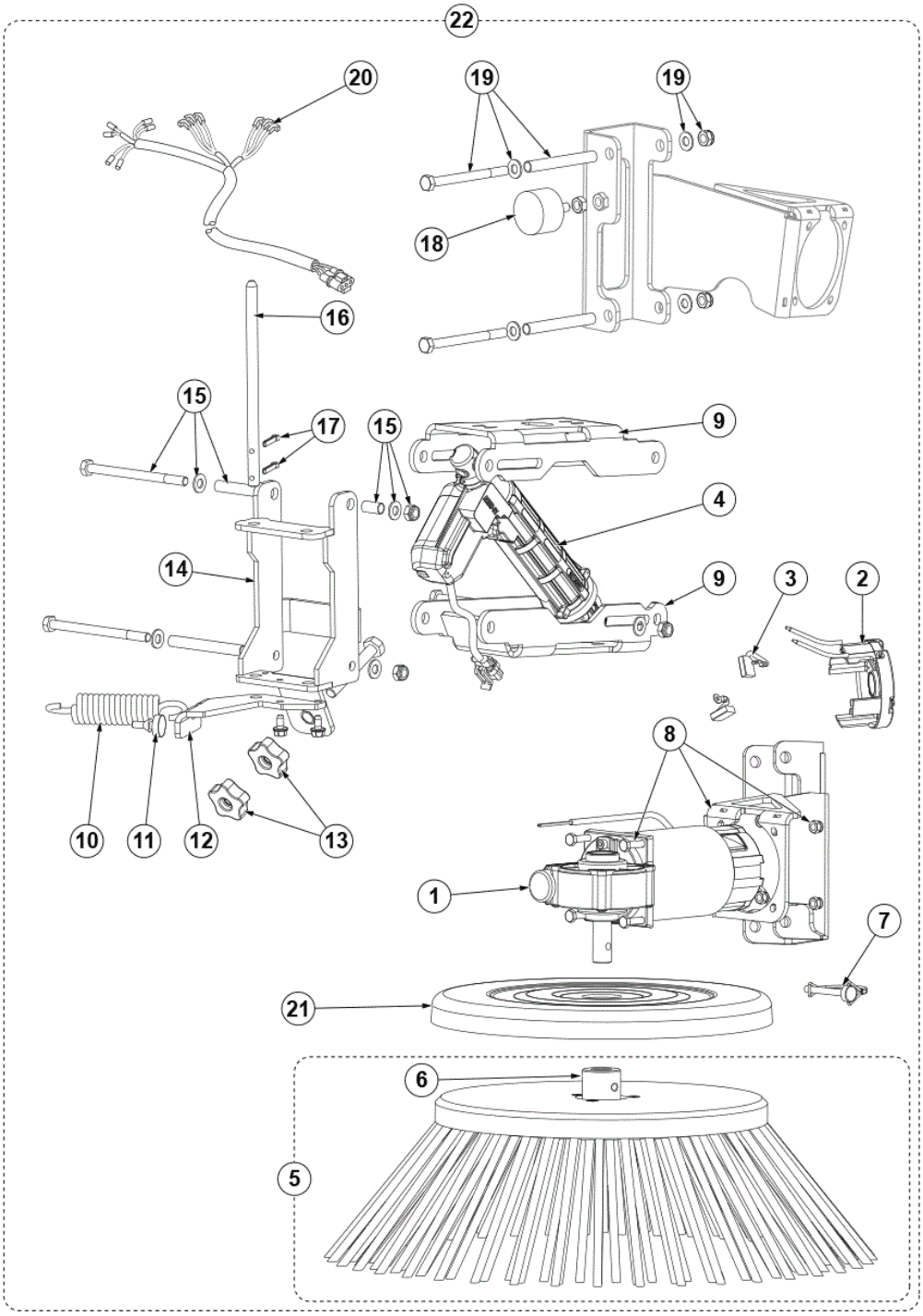
22
20
19
19
18
16
15
17
15
9
4
14
9
3
2
8
10
11
12
13
1
7
21
6
5

| Pos. | Artikel-Nr. | Menge | Variante | Notes |
|---|---|---|---|---|
| 1 | 1466674000 | 1 | MOTOR GEARBOX 24VDC 120W LT BROOM SIP | |
| 2 | 1467215000 | 1 | CAP F MOTOR BRUSHES SIP | |
| 3 | 1467083000 | 1 | CARBON BRUSH 2 PCS SET | |
| 4 | 1466663000 | 1 | ACTUATOR LINEAR 24V DC STRK 45MM SIP | |
| 5 | 1466670000 | 1 | BROOM SIDE 302X500 PPL 1.5 BLACK | |
| 5 | 1466936000 | 1 | BROOM SIDE 302X500 MIX STEEL | [1] |
| 5 | 1467076000 | 1 | BROOM SIDE 302X500 MIX 5 | [1] |
| 6 | 1466859000 | 1 | HUB F SIDE BROOM SIP | |
| 7 | 1467070000 | 1 | BOLZEN D.10 BÜRSTE M. CLIP PKD | |
| 8 | 1466666000 | 1 | KIT Platte met. schwarz Getriebezub. | |
| 9 | 1466662000 | 2 | ARM MET. BLACK F SIDE BROOM SUPP. SIP | |
| 10 | 1467071000 | 1 | SPRING EXTENTION D.E.30 WIRE D.5 SIP | |
| 11 | 1467006000 | 1 | PLUG ANTI VIBRATION D.8-D.20 10 PCS SET | |
| 12 | 1466665000 | 1 | Kit Support Seitenbesen | |
| 13 | 1467036000 | 2 | KNOB LOBES M10 FEMALE PKD | |
| 14 | 1466671000 | 1 | SUPPORT MET. BLACK F SIDE BROOM SIP | |
| 15 | 1466675000 | 1 | HARDWARE F SIDE BROOM SUPPORT KIT | |
| 16 | 1466676000 | 1 | PIN GALV. F SIDE BROOM SIP | |
| 17 | 1467005000 | 1 | PIN SPLIT 4X25 UNI1336 10 PCS SET | |
| 18 | 1467047000 | 1 | STOSSSTANGE M8 D.40X25MM SIP | |
| 19 | 1466672000 | 1 | HARDWARE F LT GEARBOX BRAKET SUPP. KIT | |
| 20 | 1467555000 | 1 | HARNESS F LT SIDE BROOM SIP | |
| 21 | 1466669000 | 1 | COVER PLASTIC SIDE BROOM PROTECT. SIP | |
| 22 | 1466888000 | 1 | BROOM LEFT SIDE PPL 1.5 KIT | [2] |

Part Notes:

[1] - OPTIONAL

[2] - OPTIONAL - INST. INSTR. 1466898000

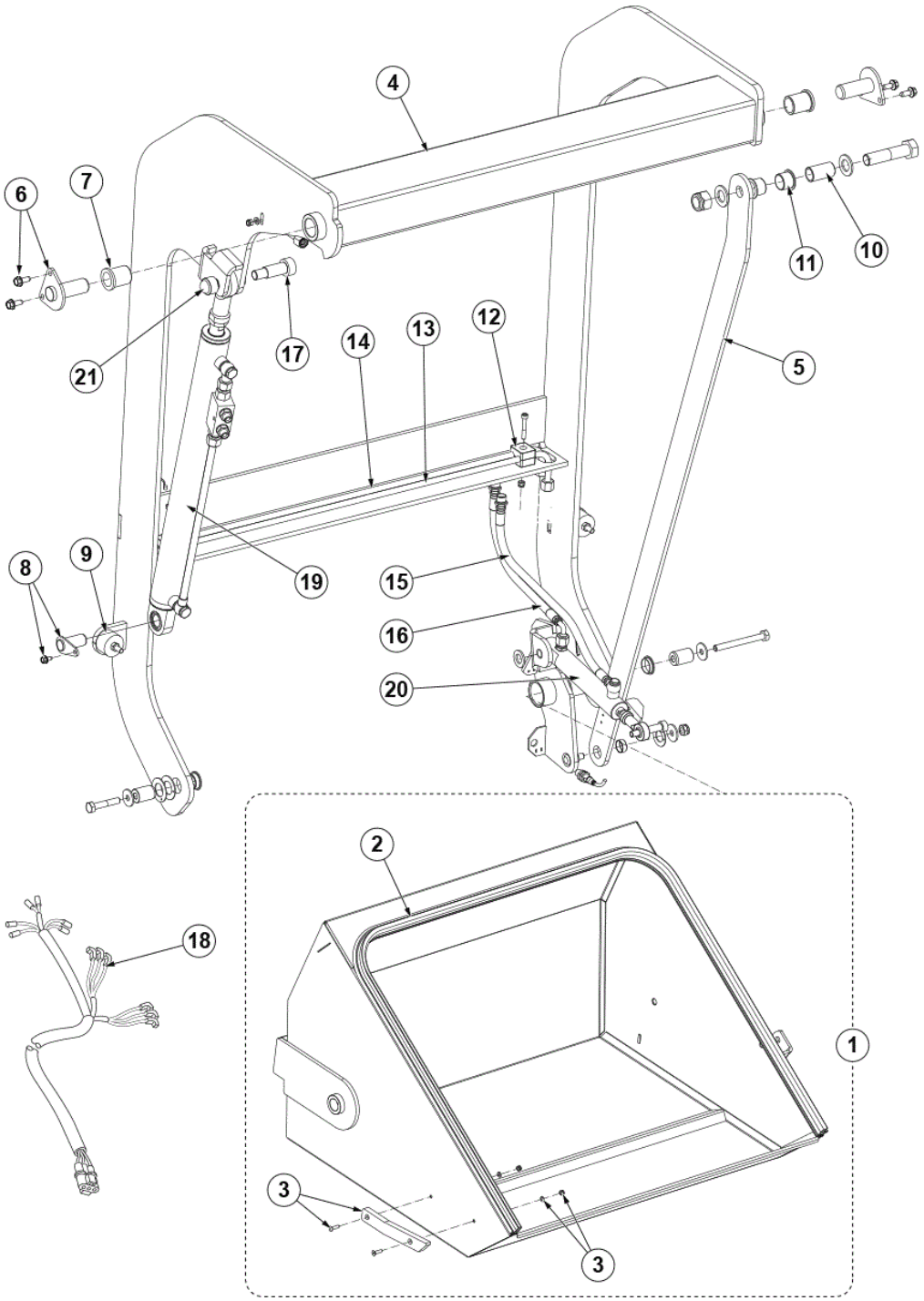
4
6
7
11
10
21
17
14
13
12
5
8
9
19
15
16
20
2
18
1
3
3

| Pos. | Artikel-Nr. | Menge | Variante | Notes |
|---|---|---|---|---|
| 1 | 1466718000 | 1 | TRICHTER-ABFALL-CPL-KIT | |
| 2 | 1466862000 | 1 | GASKET DOUBLE BULB RUBBER L.2020MM PKD | |
| 3 | 1466861000 | 1 | CAM PLASTIC F HOPPER POSITIONING KIT | |
| 4 | 1466715000 | 1 | ARM PRIMARY F HOPPER LIFTING BLACK SIP | |
| 5 | 1466716000 | 1 | ARM SECONDARY MET. F HOPPER LIFTING SIP | |
| 6 | 1466713000 | 2 | PIN PIVOTING F HOPPER ARM KIT | |
| 7 | 1467045000 | 2 | BEARING FLANGE MFM-2532-40 SIP | |
| 8 | 1466714000 | 1 | PIN F LIFTING CYLINDER KIT | |
| 9 | 1467047000 | 2 | STOSSSTANGE M8 D.40X25MM SIP | |
| 10 | 1466719000 | 1 | SPACER D.20X25 H.44.5 PHOS. SIP | |
| 11 | 1466720000 | 1 | BEARING FL.IGLIDUR GFM-2528-21 2 PCS SET | |
| 12 | 1466717000 | 3 | CLAMP TWIN D.10 PLASTIC BLUE 3 PCS SET | |
| 13 | 1466728000 | 1 | HOSE SEMI RIGID D.10 HOPPER DUMPING SIP | [1] |
| 14 | 1466729000 | 1 | HOSE SEMI RIGID D.10 HOPPER RECALL SIP | [1] |
| 15 | 1466730000 | 1 | HOSE HYDRAULIC 1/4 R1AT L.550MM SIP | |
| 16 | 1466731000 | 1 | HOSE HYDRAULIC 1/4 R1AT L.490MM SIP | |
| 17 | 1467018000 | 1 | SCREW SHOULDER 20X40 M16 2 PCS SET | |
| 18 | 1467553000 | 1 | HARNESS HOPPER SIP | |
| 19 | 1466790000 | 1 | CYLINDER HYDRAULIC 40/25/470 CPL KIT | |
| 20 | 1466723000 | 1 | CYLINDER HYDRAULIC 25/16/120 CPL KIT | |
| 21 | 1466732000 | 1 | CAP PLASTIC BLACK F HEXAGON 24MM SIP | |

Part Notes:

[1] - STOCK COVERS GUARANTEE

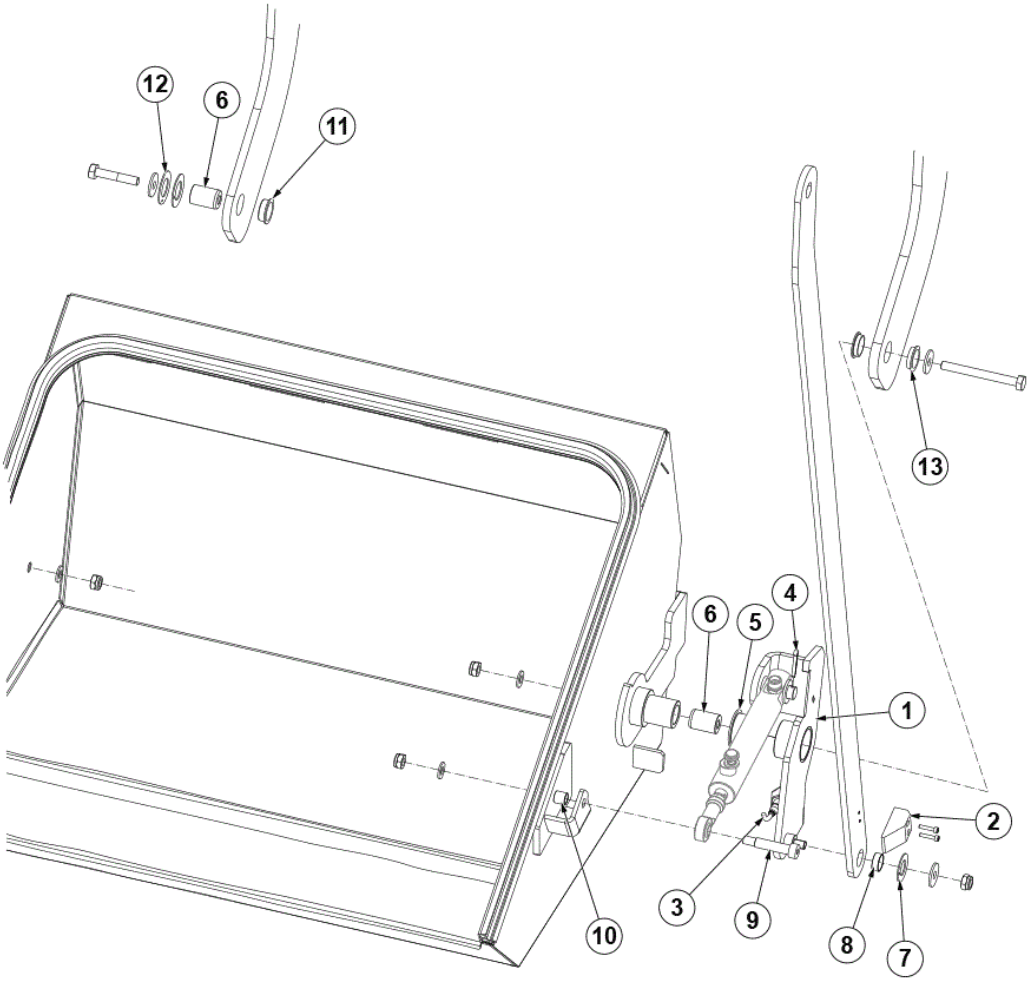
12
6
11
13
4
6
5
1
2
10
3
9
8
7

| Pos. | Artikel-Nr. | Menge | Variante | Notes |
|---|---|---|---|---|
| 1 | 1466722000 | 1 | BRACKET MET. F LIFTING ARMS JOINT SIP | |
| 2 | 1466724000 | 1 | BLOCK PLASTIC F LIFTING ARM GUIDE SIP | |
| 3 | 33018521 | 1 | SWITCH BACK UP PROXIMITY | |
| 4 | 1467005000 | 1 | PIN SPLIT 4X25 UNI1336 10 PCS SET | |
| 5 | 1466721000 | 1 | BEARING FLANGE IGLIDUR GFM-3539-36 SIP | |
| 6 | 1467043000 | 1 | PIN HOPPER PHOS. SIP | |
| 7 | 1467017000 | 1 | WASHER THRUST GTM 2036-015 2 PCS SET | |
| 8 | 1466726000 | 1 | BEARING FLANGE IGLIDUR GSM-2022-08 SIP | |
| 9 | 1467019000 | 1 | SCHRAUBSCHULTER 12X45 M10 2-TEILIGES SET | |
| 10 | 1466725000 | 1 | ABSTANDSHALTER D.12.5X15 H.14 SCHWARZ PL | |
| 11 | 1467044000 | 3 | BEARING FLANGE GFM-2427-10 PKD | |
| 12 | 1467016000 | 1 | WASHER THRUST GTM 2442-015 2 PCS SET | |
| 13 | 1466727000 | 1 | BEARING FL.IGLIDUR GFM-2427-07 2 PCS SET | |

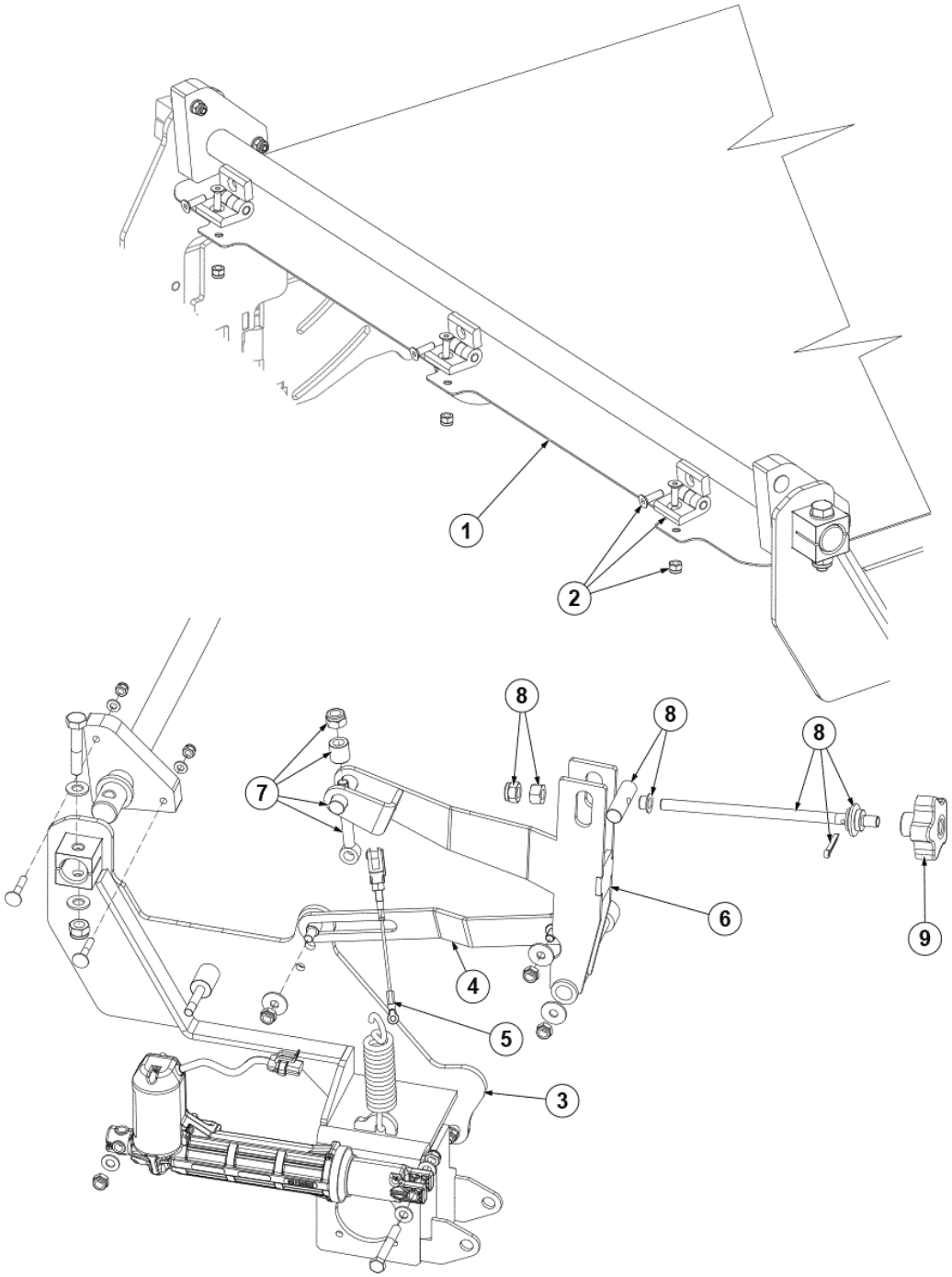
1
2
8
8
8
7
6
9
4
5
3

| Pos. | Artikel-Nr. | Menge | Variante | Notes |
|---|---|---|---|---|
| 1 | 1466699000 | 1 | PLATE GALV. MOBILE WALL SIP | |
| 2 | 1466698000 | 3 | HINGES F MOVABLE WALL KIT | |
| 3 | 1467527000 | 1 | ARM RT GALV. F MAIN BROOM SUPPORT SIP | |
| 4 | 1466704000 | 1 | LEVER GALV. F MAIN BROOM SUPPORT SIP | |
| 5 | 1466697000 | 1 | TIE-ROD METALLIC F BROOM SPRING SIP | |
| 6 | 1466702000 | 1 | LEVER GALV. F MAIN BROOM LIFTING SIP | |
| 7 | 1466696000 | 1 | ADJUSTING F MAIN BROOM SPRING KIT | |
| 8 | 1466700000 | 1 | SCREW F MAIN BROOM SETTING KIT | |
| 9 | 1466701000 | 1 | KNOB LOBES M10 F W/ORANGE CAP SIP | |

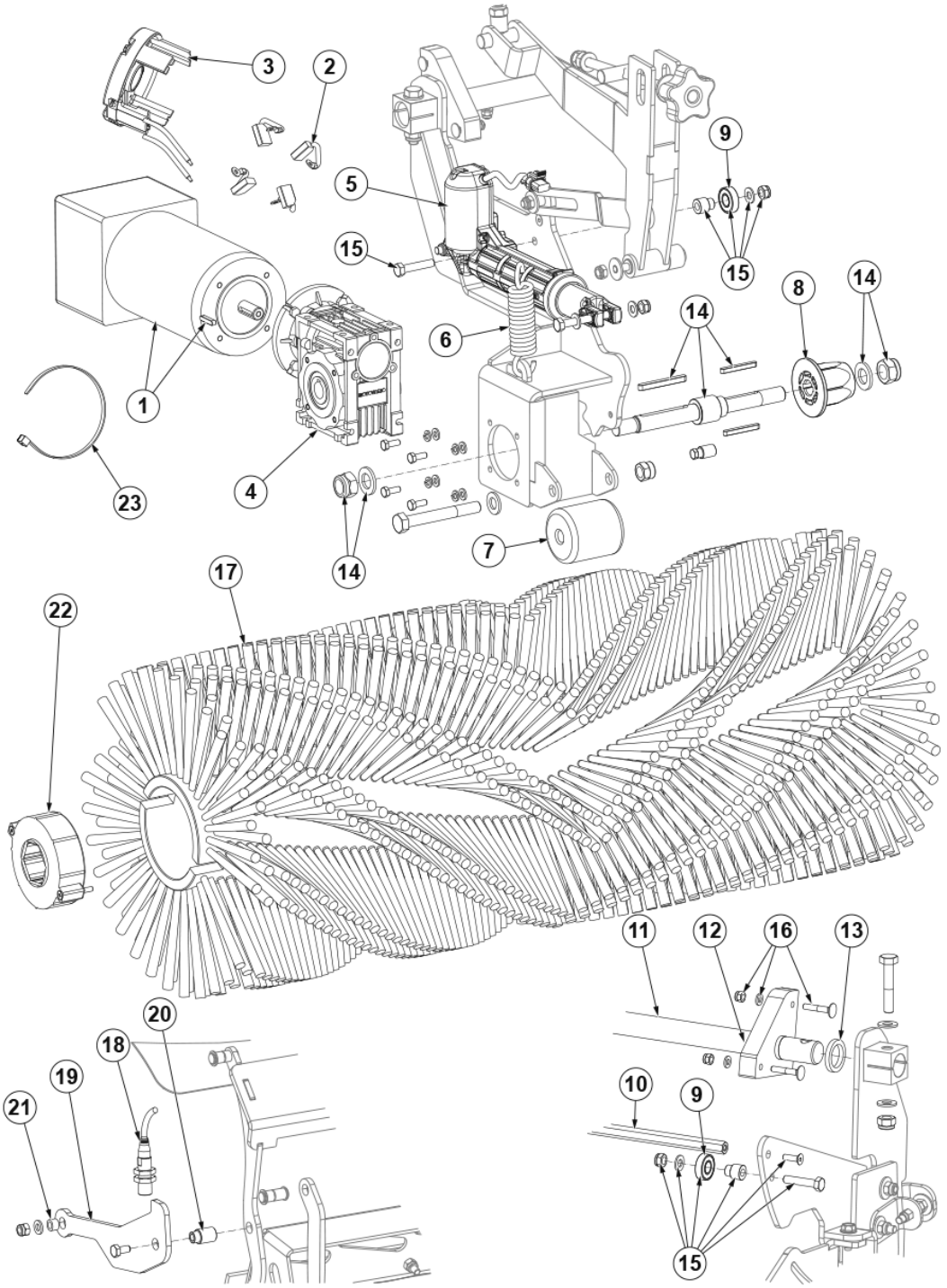
3
2
9
5
15
15
8
14
14
6
1
23
4
14
7
17
22
11
12
16
13
20
18
19
21
10
9
15

| Pos. | Artikel-Nr. | Menge | Variante | Notes |
|---|---|---|---|---|
| 1 | 1466946000 | 1 | MOToR 24V 1250W 3800 RPM IP44 MP80L | |
| 2 | L08603949 | 1 | Kohlenbürsten Kit 4pcs | [1] |
| 3 | 1467184000 | 1 | CAP F MP80L MOTOR BRUSHES SIP | |
| 4 | 1466691000 | 1 | GEAR BOX 7.5/1 71 B14 SIP | |
| 5 | 1466663000 | 1 | ACTUATOR LINEAR 24V DC STRK 45MM SIP | |
| 6 | 1467071000 | 1 | SPRING EXTENTION D.E.30 WIRE D.5 SIP | |
| 7 | 1467069000 | 1 | ROLLER SIDE BLADE SIP | |
| 8 | 1467056000 | 1 | HUB MAIN BROOM PKD | |
| 9 | 44905699 | 2 | BEARING BALL 6001 2RS PKD | |
| 10 | 1466689000 | 1 | SHAFT HEX REINFORCE F MAIN BROOM SIP | |
| 11 | 1466693000 | 1 | SHAFT GALV. MAIN BROOM SIP | |
| 12 | 1466694000 | 2 | SUPPORT PLASTIC F MAIN BROOM SHAFT KIT | |
| 13 | 1466695000 | 2 | SPACER PLASTIC F MAIN BROOM SHAFT KIT | |
| 14 | 1466690000 | 1 | SHAFT F MAIN BROOM KIT | |
| 15 | 1466688000 | 1 | SUPPORT F MOVABLE GUIDE KIT | |
| 16 | 1466692000 | 2 | HARDWARE F MAIN BROOM SUPPORT KIT | |
| 17 | 1465717000 | 1 | Hauptkehrwalze 360X850 8R PPL 0.8 | |
| 17 | 1465730000 | 1 | BROOM MAIN 360X850 8R MIX STEEL WHITE | [2] |
| 17 | 1465731000 | 1 | BROOM MAIN 360X850 8R PPL 1 BLACK | [2] |
| 18 | 1468013000 | 1 | SENSOR BACK UP PROXIMITY | |
| 19 | 1466705000 | 1 | PLATTE LINKING GALV. F FRONTSCHÜRZE SIP | |
| 20 | 1466865000 | 1 | STIFT D10/13 GALV. SIP | |
| 21 | 1467037000 | 1 | SPACER 6.1X10X6.5 PKD | |
| 22 | 1467525000 | 1 | HUB CPL F MAIN BROOM KIT | [3] |
| 23 | 1467025000 | 1 | TIE CABLE 2.9X130 BLACK 10 PCS SET | |

Part Notes:

[1] - REPLACED BY 56601509
[2] - OPTIONAL
[3] - FOR ALL MAIN BROOMS: 1465717000 - 1465730000 - 1465731000

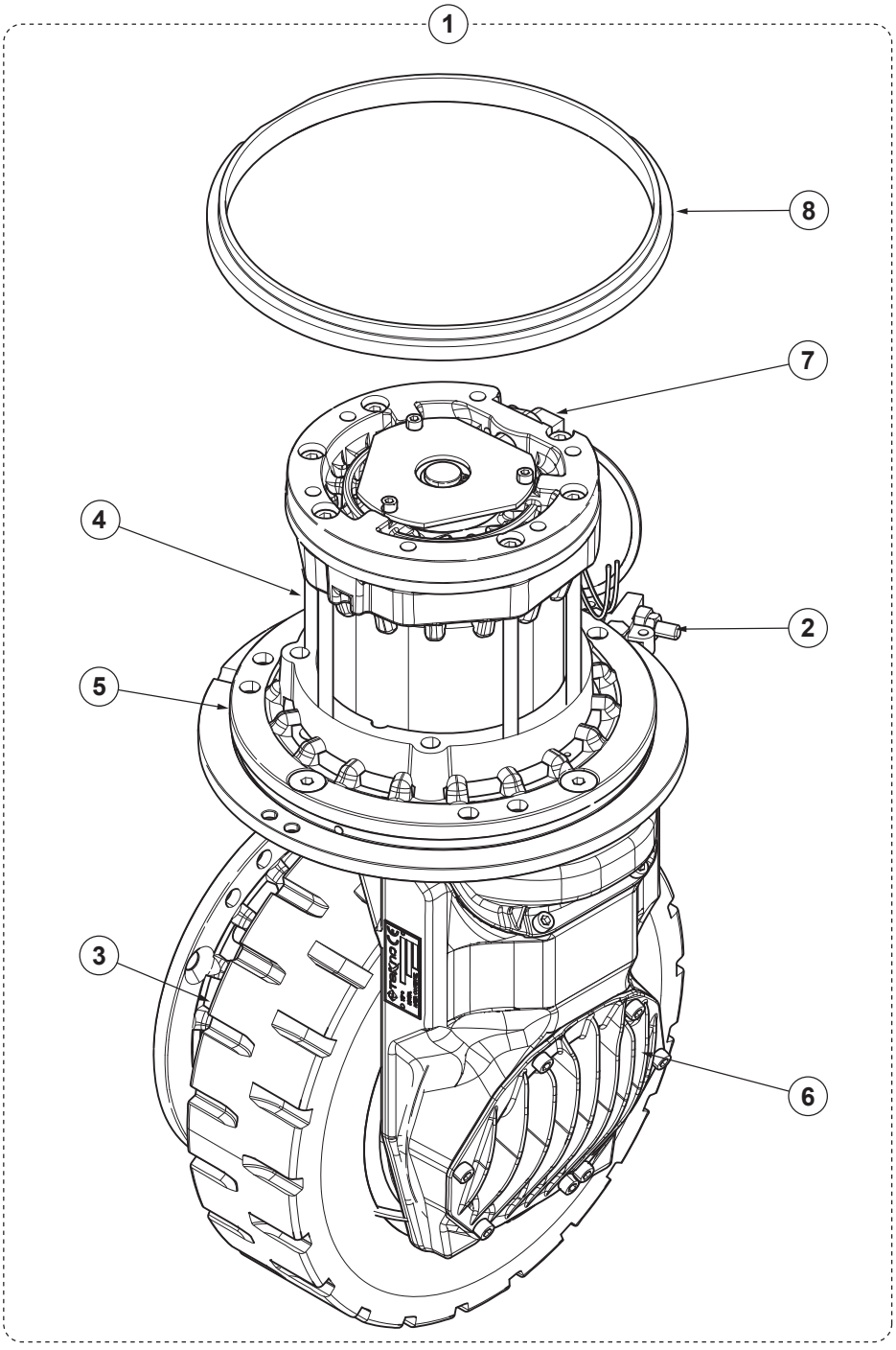
1
8
7
4
2
5
3
6

| Pos. | Artikel-Nr. | Menge | Variante | Notes |
|---|---|---|---|---|
| 1 | 1467191000 | 1 | MOTORWHEEL TV-130 24V AC 1.2KW KIT | |
| 2 | 1465990000 | 1 | STRETCHER F CHAIN | |
| 3 | 1466255000 | 1 | WHEEL NON MARKING D300X85 | |
| 4 | 1466461000 | 1 | MOTOR AC 24V 1.2KW | |
| 5 | 1466468000 | 1 | PLATE STEERING F MOTORWHEEL TV-130MF | |
| 6 | 1466474000 | 1 | GEAR BOX F MOTORWHEEL TV-130 1/28.4 | |
| 7 | 1467192000 | 1 | SENSOR SPEED KIT | |
| 5 and 8 | 1467955000 | 1 | BEARING PROTECTED KIT | [1] |

Part Notes:

[1] - 1467956000_INSTALLATION INSTRUCTION FOR 1467955000 KIT

TSB-FC-2022-004 SW5500 steering

DE TSB-FC-2022-004 SW5500 Neuer Schutzring für Drehkranzlager

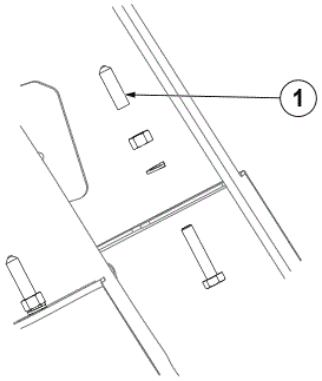
1

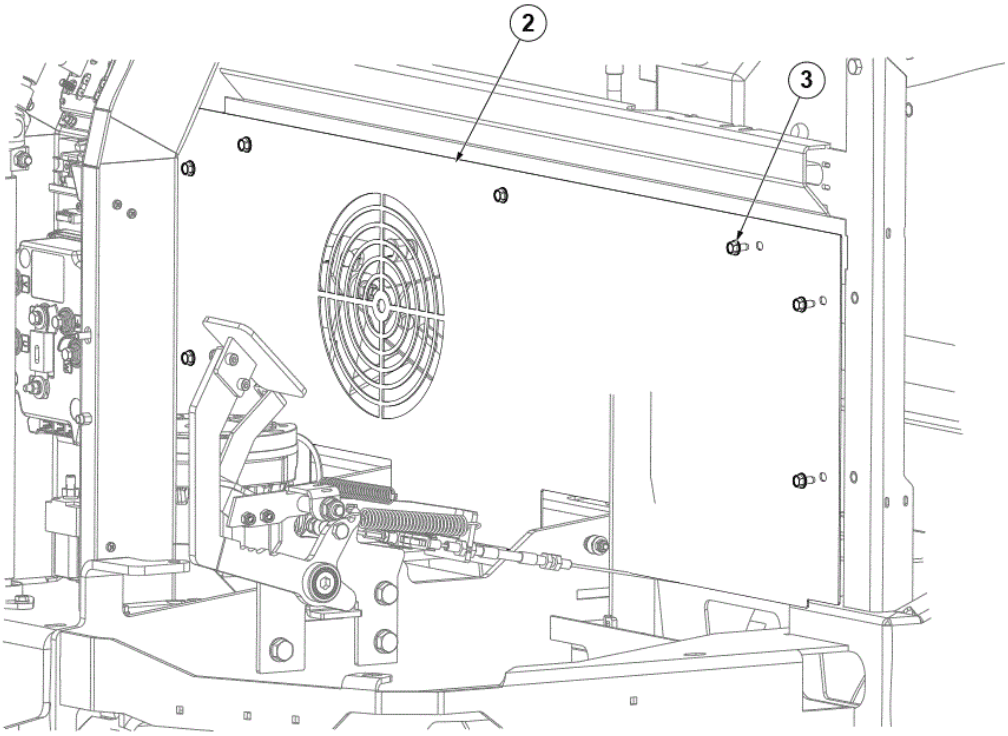
2
3

| Pos. | Artikel-Nr. | Menge | Variante | Notes |
|---|---|---|---|---|
| 1 | 1467897000 | 1 | CAP VINYL 2 PCS SET | |
| 1 | 1467013000 | 2 | CAP VINYL 3 PCS SET | |
| 2 | 1466864000 | 1 | PANEL METAL FRONT F CHASSIS BLACK KIT | |
| 3 | 1467022000 | 4 | SCREW M6X12 HEX HD DIN7500 2 PCS SET | |

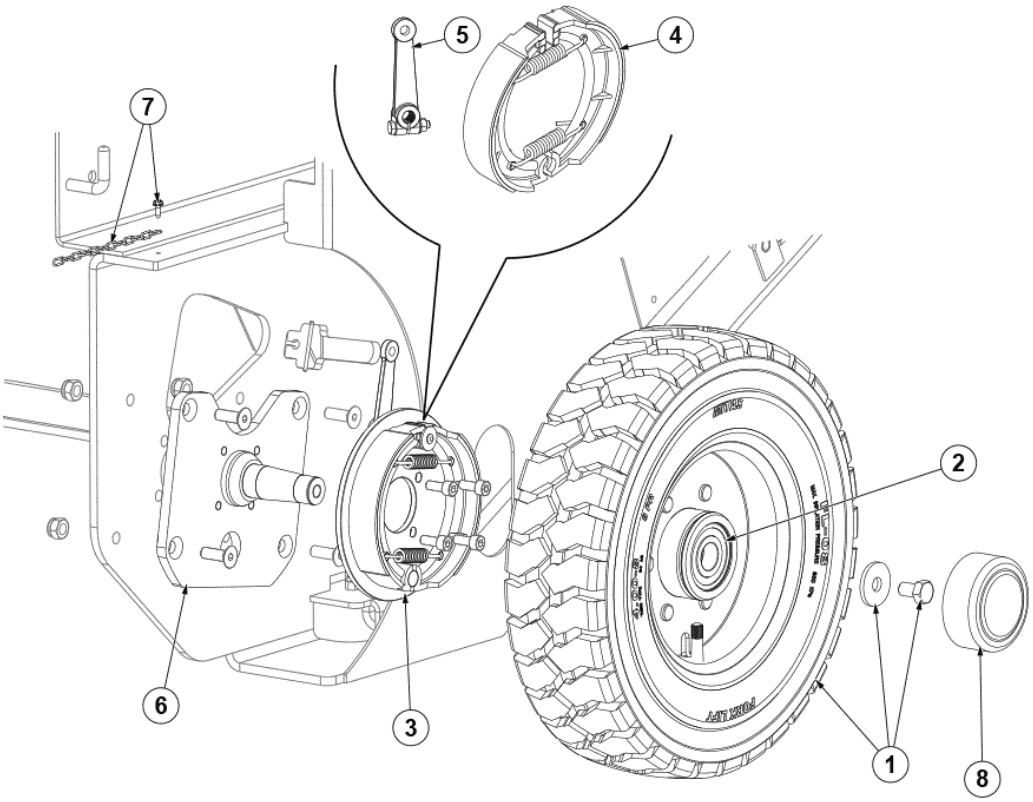
5
4
7
2
6
3
1
8

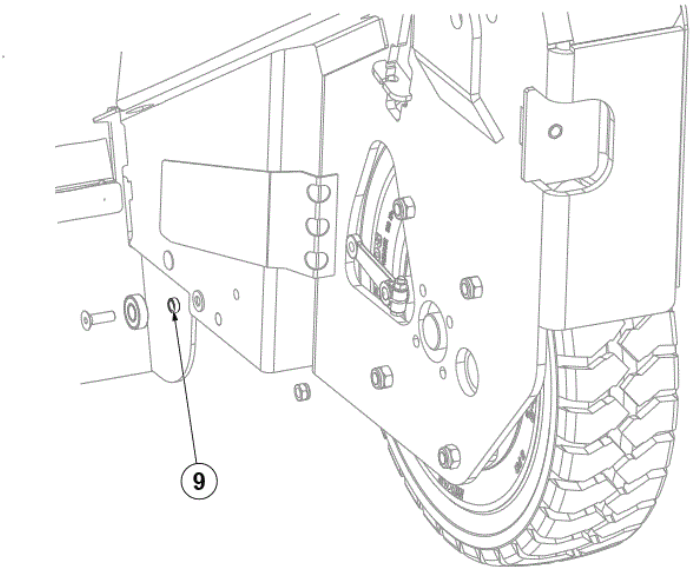
9

| Pos. | Artikel-Nr. | Menge | Variante | Notes |
|---|---|---|---|---|
| 1 | 1466587000 | 1 | WHEELS FOAMED 4.00-8 CPL KIT | |
| 1 | 1466588000 | 1 | WHEELS SOLID 4.00-8 NON MARKING CPL KIT | [1] |
| 1 | 1466860000 | 1 | WHEELS SOLID 4.00-8 CPL KIT | [1] |
| 2 | 33023318 | 2 | BEARING AND SPACER F 5.00-8 WHEEL KIT | |
| 3 | 33020205 | 2 | DRUM BRAKE KIT | |
| 4 | 1467066000 | 2 | SHOE BRAKE SIP | |
| 5 | 1467244000 | 2 | LEVER F DRUM BRAKE PKD | |
| 6 | 1467060000 | 2 | SUPPORT FRONT WHEEL PHOS. SIP | |
| 7 | 1466586000 | 1 | CHAIN GROUND L.160MM KIT | |
| 8 | 1467021000 | 1 | CAP 2 PCS SET | |
| 9 | 1467026000 | 1 | SPACER D.8X12 H.5 ZNT SIP | |

Part Notes:

[1] - OPTIONAL

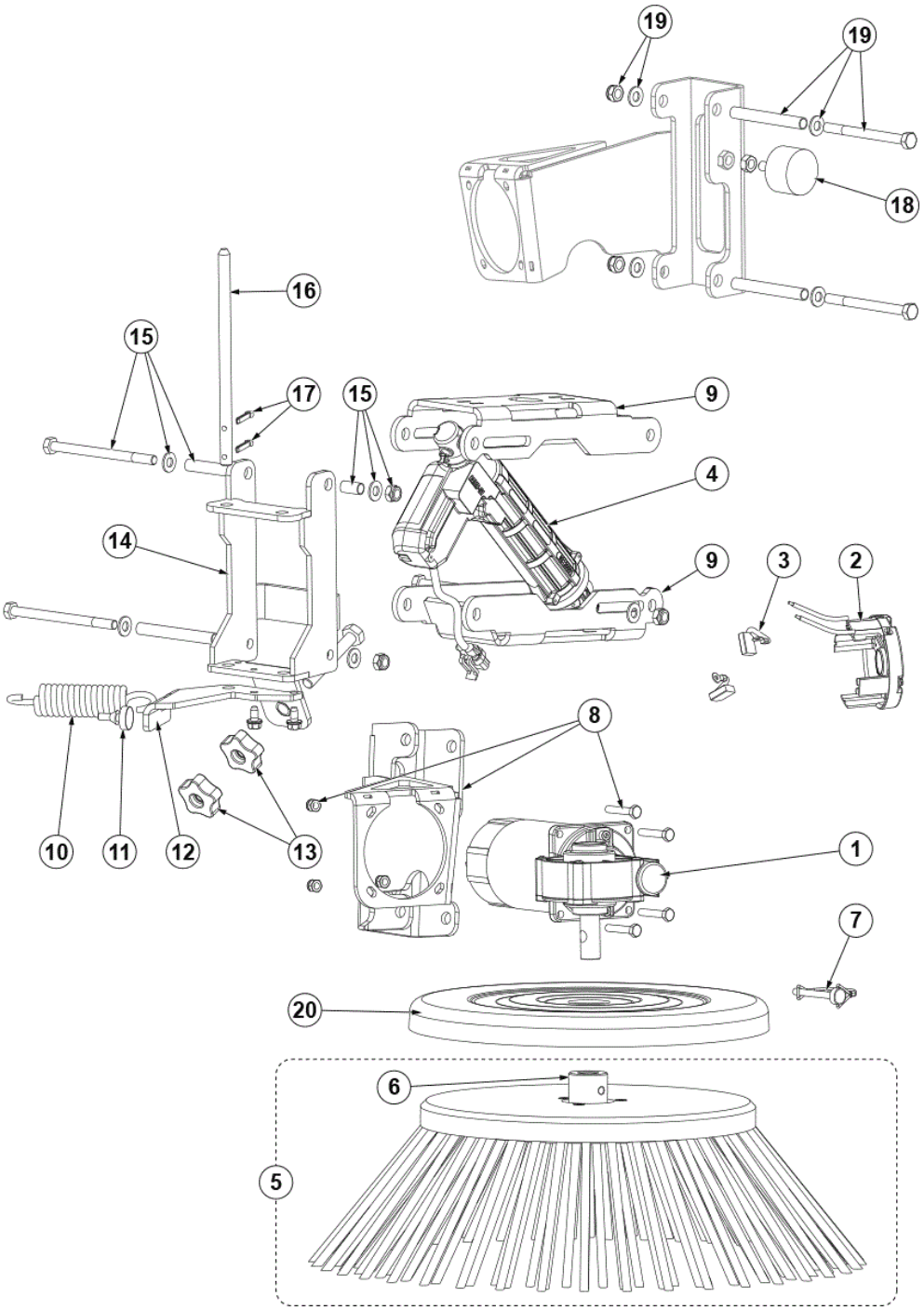
19
19
18
16
15
17
15
9
4
14
9
3
2
8
10
11
12
13
1
7
20
6
5

| Pos. | Artikel-Nr. | Menge | Variante | Notes |
|---|---|---|---|---|
| 1 | 1466668000 | 1 | MOTOR GEARBOX 24VDC 120W RT BROOM SIP | |
| 2 | 1467215000 | 1 | CAP F MOTOR BRUSHES SIP | |
| 3 | 1467083000 | 1 | CARBON BRUSH 2 PCS SET | |
| 4 | 1466663000 | 1 | ACTUATOR LINEAR 24V DC STRK 45MM SIP | |
| 5 | 1466670000 | 1 | BROOM SIDE 302X500 PPL 1.5 BLACK | |
| 5 | 1466936000 | 1 | BROOM SIDE 302X500 MIX STEEL | [1] |
| 5 | 1467076000 | 1 | BROOM SIDE 302X500 MIX 5 | [1] |
| 6 | 1466859000 | 1 | HUB F SIDE BROOM SIP | |
| 7 | 1467070000 | 1 | BOLZEN D.10 BÜRSTE M. CLIP PKD | |
| 8 | 1466667000 | 1 | BRACKET MET. BLACK F RT GEARBOX SUPP KIT | |
| 9 | 1466662000 | 2 | ARM MET. BLACK F SIDE BROOM SUPP. SIP | |
| 10 | 1467071000 | 1 | SPRING EXTENTION D.E.30 WIRE D.5 SIP | |
| 11 | 1467006000 | 1 | PLUG ANTI VIBRATION D.8-D.20 10 PCS SET | |
| 12 | 1466665000 | 1 | Kit Support Seitenbesen | |
| 13 | 1467036000 | 2 | KNOB LOBES M10 FEMALE PKD | |
| 14 | 1466671000 | 1 | SUPPORT MET. BLACK F SIDE BROOM SIP | |
| 15 | 1466675000 | 1 | HARDWARE F SIDE BROOM SUPPORT KIT | |
| 16 | 1466676000 | 1 | PIN GALV. F SIDE BROOM SIP | |
| 17 | 1467005000 | 1 | PIN SPLIT 4X25 UNI1336 10 PCS SET | |
| 18 | 1467047000 | 1 | STOSSSTANGE M8 D.40X25MM SIP | |
| 19 | 1466673000 | 1 | HARDWARE F RT GEARBOX BRAKET SUPP. KIT | |
| 20 | 1466669000 | 1 | COVER PLASTIC SIDE BROOM PROTECT. SIP | |

Part Notes:

[1] - OPTIONAL

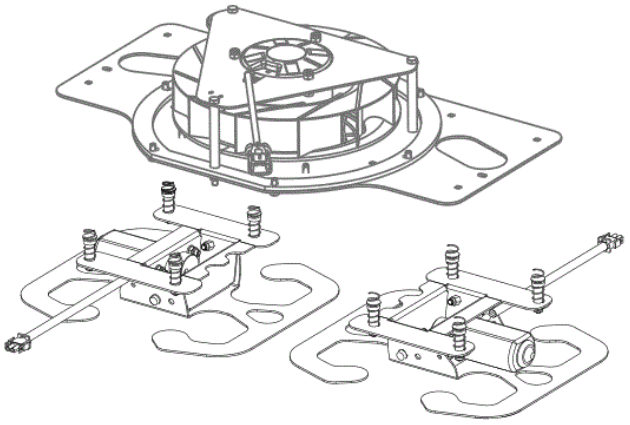

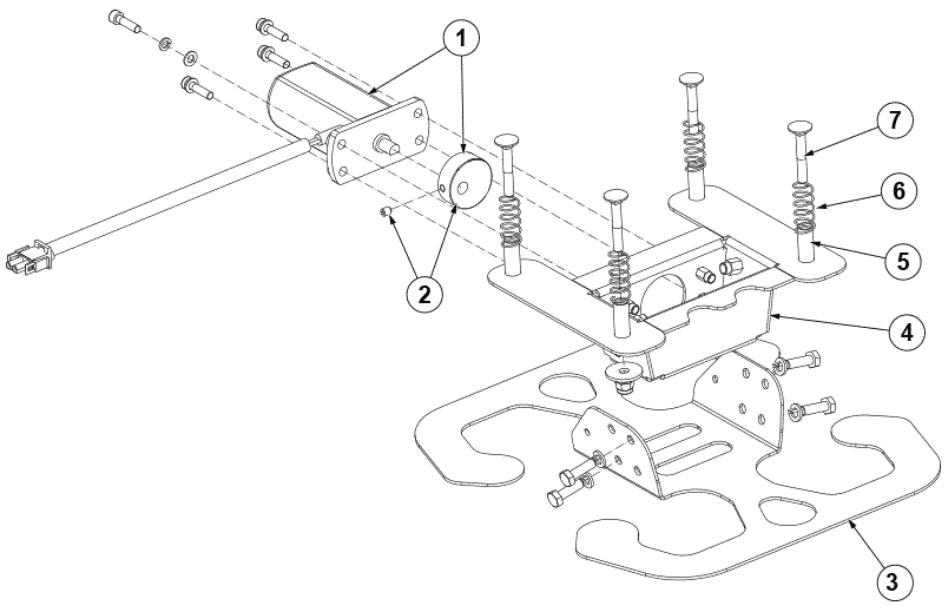
1
2
3
4
5
6
7

| Pos. | Artikel-Nr. | Menge | Variante | Notes |
|---|---|---|---|---|
| 1 | 1466314000 | 2 | MOTOR FILTER SHAKER 12W 24V KIT | |
| 2 | 1466857000 | 2 | CAM F FILTER SHAKER KIT | |
| 3 | 1466879000 | 2 | BRACKET GALV. F FILTER SHAKER SIP | |
| 4 | 1466878000 | 2 | SUPPORT GALV. F FILTER SHAKER MOTOR SIP | |
| 5 | 1467010000 | 2 | SPACER FL.D.6.25X10 H.26 GALV. 4 PCS SET | |
| 6 | 1467009000 | 2 | SPRING COMPRESS. D.E.13.5 4 PCS SET | |
| 7 | 1467003000 | 1 | SCREW M6X40 CARR. ISO8677 10 PCS SET | |

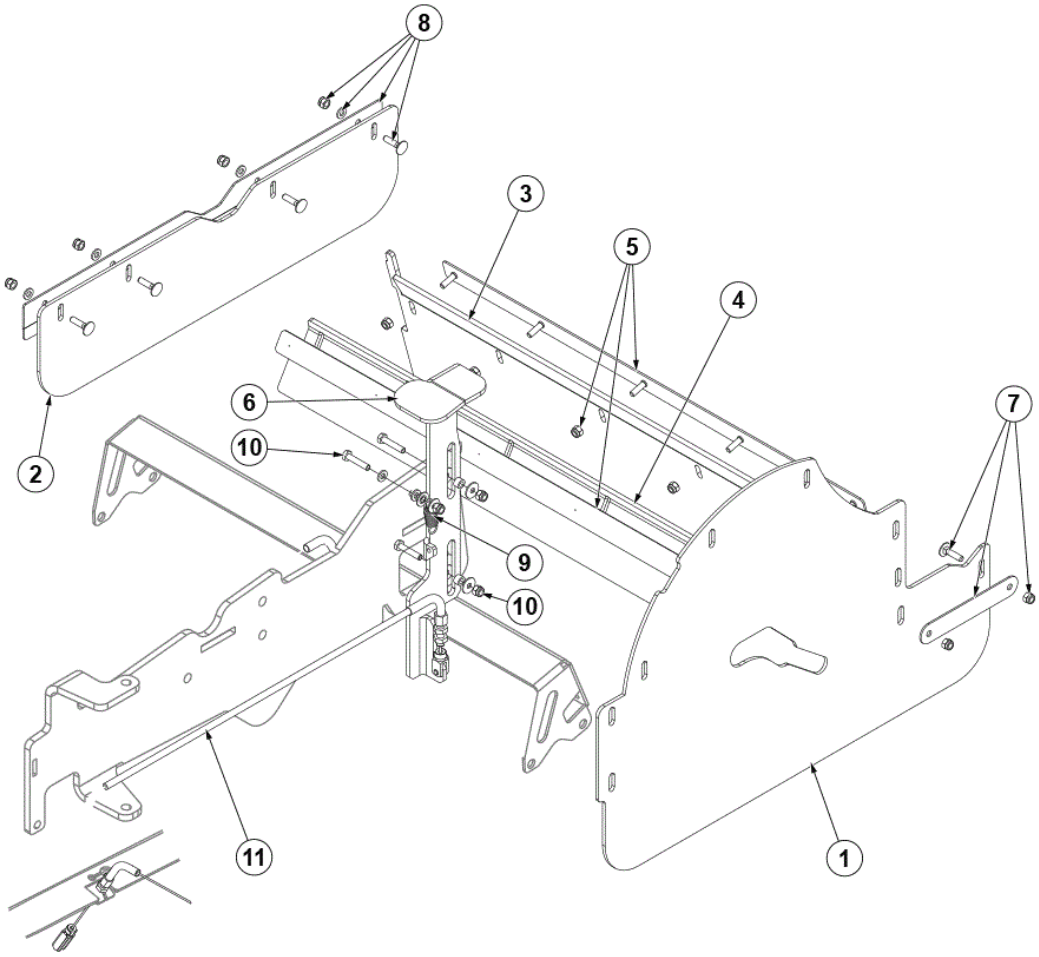
8
3
5
4
6
7
10
2
9
10
11
1

| Pos. | Artikel-Nr. | Menge | Variante | Notes |
|---|---|---|---|---|
| 1 | 1466614000 | 1 | SKIRT LT SIDE BLACK RUBBER PKD | |
| 2 | 1466619000 | 1 | SKIRT RT SIDE BLACK RUBBER PKD | |
| 3 | 1466613000 | 1 | SKIRT REAR PRIMARY BLACK RUBBER PKD | |
| 4 | 1466616000 | 1 | SKIRT REAR RECYCLING BLACK RUBBER PKD | |
| 5 | 1466617000 | 1 | PLATTE GALV. F PRIMÄRES HECKSCHÜRZENSET | |
| 6 | 1466611000 | 1 | PEDAL GALV.F FRONT SKIRT RAISING SIP | [1] |
| 6 | 1467575000 | 1 | PEDAL GALV.F FRONT SKIRT RAISING SIP | [2] |
| 7 | 1466615000 | 1 | PLATE GALV. F LT SKIRT KIT | |
| 8 | 1466618000 | 1 | PLATE GALV. F RT SIDE SKIRT KIT | |
| 9 | 1467039000 | 1 | FEDERZUG AUS KOHLENSTOFFSTAHL SIP | |
| 10 | 1466610000 | 1 | HARDWARE F FRONTSCHÜRZEN-PEDALSATZ | |
| 11 | 1467577000 | 1 | WIRE F FRONT SKIRT RAISING SIP | |

Part Notes:

[1] - Until S/N 3810172000033

[2] - Starting from S/N 3810172000034

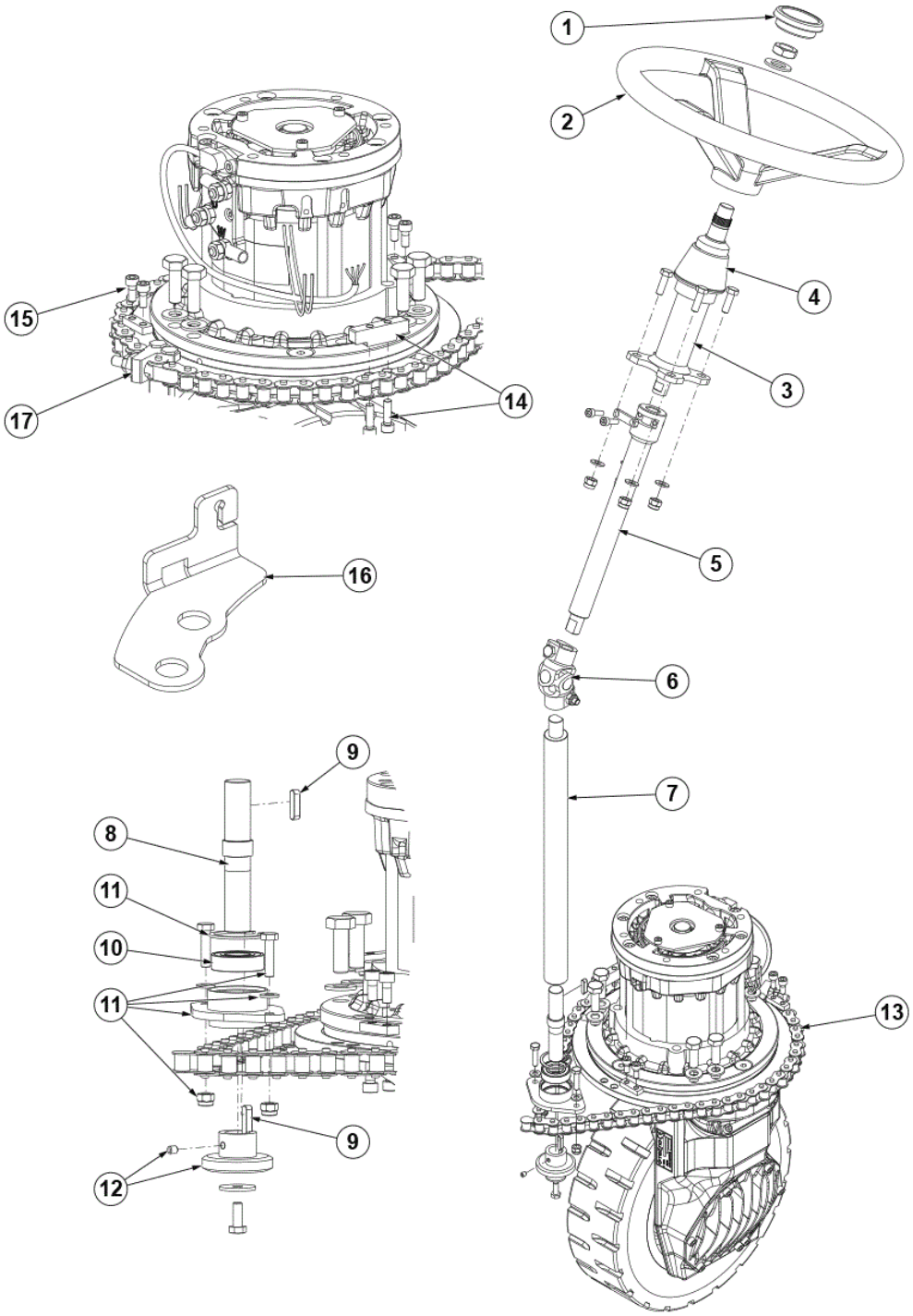
1
2
4
3
5
6
7
13
15
17
14
16
9
8
11
10
11
9
12

| Pos. | Artikel-Nr. | Menge | Variante | Notes |
|---|---|---|---|---|
| 1 | 1467031000 | 1 | CAP PKD | |
| 2 | 1467048000 | 1 | STEERING WHEEL D.362 TAPER 1/19.26 SIP | |
| 3 | 1466525000 | 1 | COLUMN STEERING SIP | |
| 4 | 1467055000 | 1 | COVER F STEERING COLUMN SIP | |
| 5 | 1466593000 | 1 | SHAFT STEERING UPPER KIT | |
| 6 | 1466319000 | 1 | JOINT UNIVERSAL D.17 PKD | |
| 7 | 1466594000 | 1 | SHAFT GALV. VERTICAL F STEERING SIP | |
| 8 | 1466595000 | 1 | SHAFT STEERING LOWER PHOS. SIP | |
| 9 | 1466147000 | 2 | KEY 5X5X20 UNI6604A PKD | |
| 10 | 1467030000 | 1 | BEARING BALL 6003 2RS PKD | |
| 11 | 1466601000 | 1 | HOUSING PHOS. F STEERING BEARING KIT | |
| 12 | 1466599000 | 1 | PINION Z8 5/8X3/8 MET. KIT | |
| 13 | 1466600000 | 1 | CHAIN ISO 10B-1 57 PITCHES 2 LINKS SIP | |
| 14 | 1466597000 | 1 | STOP F STEERING GALV. ON MOTORWHEEL KIT | |
| 15 | 1466596000 | 1 | STOP F STEERING GALV. ON CHASSIS KIT | |
| 16 | 1467574000 | 1 | BRACKET F ACCELERATOR PEDAL SPRING SIP | |
| 17 | 1465990000 | 1 | STRETCHER F CHAIN | |

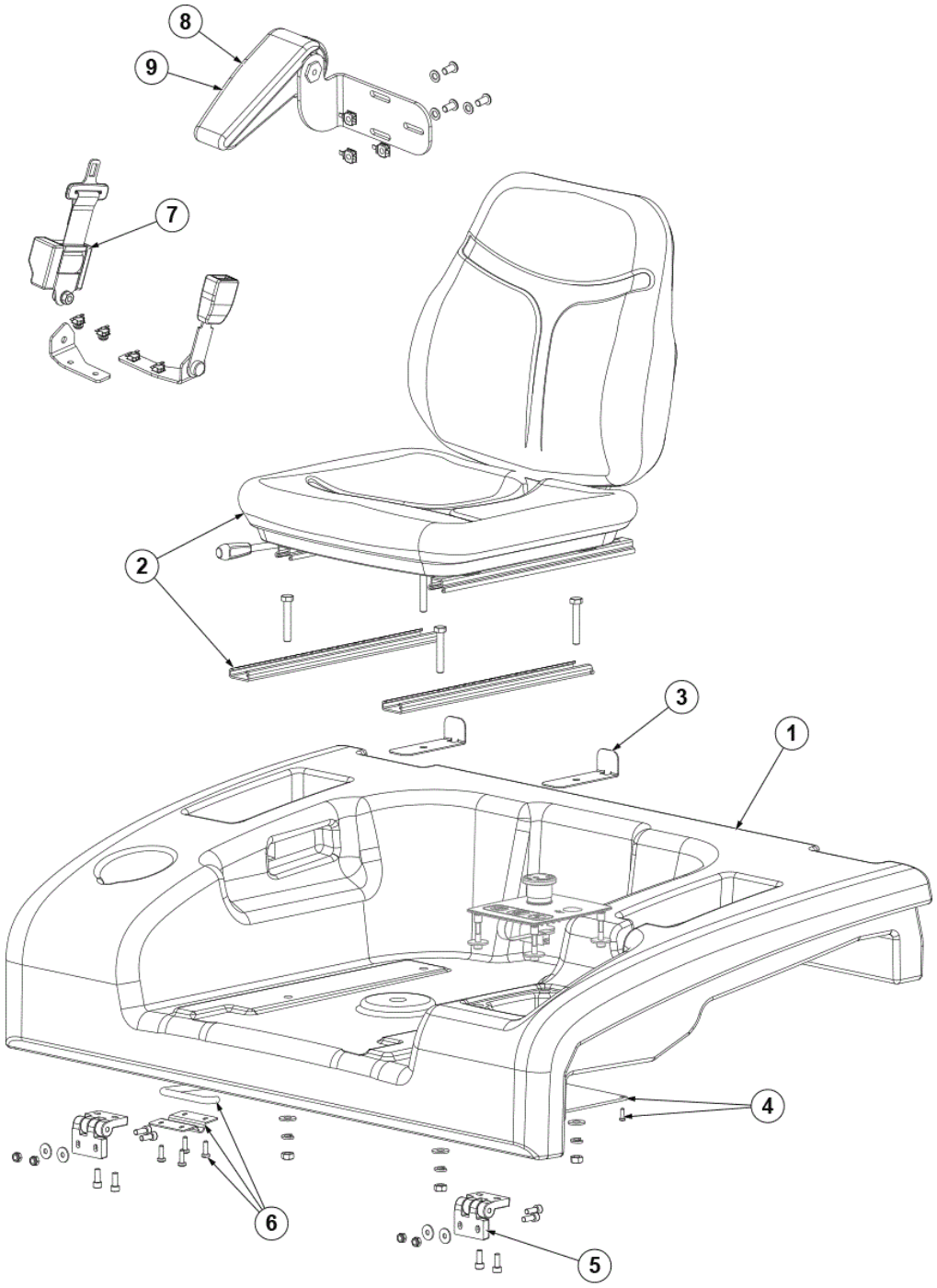
8
9
7
2
3
1
4
6
5

| Pos. | Artikel-Nr. | Menge | Variante | Notes |
|---|---|---|---|---|
| 1 | 1466837000 | 1 | SUPPORT PLASTIC GREY F SEAT SIP | |
| 2 | 1466887000 | 1 | SEAT SUSPENSION KIT | [1] |
| 2 | 1467028000 | 1 | SEAT PKD | |
| 3 | 1466937000 | 2 | BRACKET MET. BLACK F SEAT BLOCK SIP | [2] |
| 3 | 1467078000 | 2 | BRACKET BLACK SUSPENSION SEAT BLOCK SIP | [3] |
| 4 | 1466839000 | 1 | COVER PLASTIC F SAFETY SWITCH KIT | |
| 5 | 9098329000 | 1 | Schanier Kit | |
| 6 | 1465042000 | 1 | SUPPORT F SAFETY BAR KIT | |
| 7 | 1464954000 | 1 | Sicherheitsgurt-Set | [4] |
| 8 | 1464960000 | 1 | Armlehne-Set links | [5] |
| 9 | 33019556 | 1 | Armlehne-Set rechts | [6] |

Part Notes:

[1] - OPTIONAL - INS. INSTR. 1466897000
[2] - FOR SEAT - REF. 1467028000
[3] - FOR SEAT SUSPENSION - REF. 1466887000
[4] - OPTIONAL - INST. INSTR. 1465247000
[5] - OPTIONAL - INST. INSTR. 1465249000
[6] - OPTIONAL

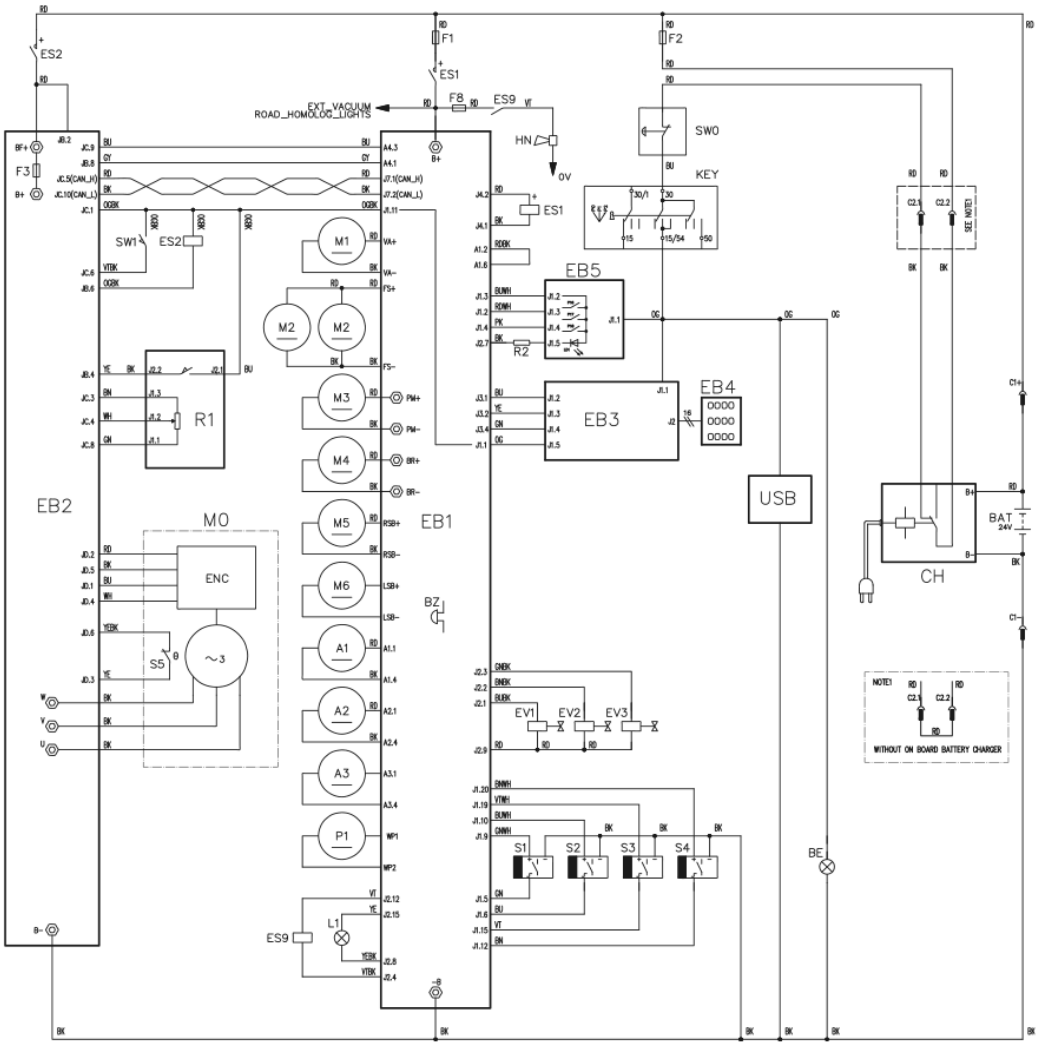
ES2
F1
ES1
F2
F8
ES9
HN
SW0
KEY
F3
SW1
R1
R2
EB1
EB2
EB3
EB4
EB5
M0
ENC
S5
M1
M2
M3
M4
M5
M6
A1
A2
A3
P1
L1
BZ
EV1
EV2
EV3
S1
S2
S3
S4
USB
BE
BAT
CH
NOTE1
WITHOUT ON BOARD BATTERY CHARGER

| Pos. | Artikel-Nr. | Menge | Variante | Notes |
|---|---|---|---|---|
| A1 | 1466663000 | | ACTUATOR LINEAR 24V DC STRK 45MM SIP | |
| A2 | 1466663000 | | ACTUATOR LINEAR 24V DC STRK 45MM SIP | |
| A3 | 1466663000 | | ACTUATOR LINEAR 24V DC STRK 45MM SIP | |
| BE | 1464948000 | | Warnleuchte | |
| C1 | 1467029000 | | CONNECTOR 175A RED PKD | |
| C2 | 1467029000 | | CONNECTOR 175A RED PKD | |
| CH | 1466893000 | | CHARGER BATT. ONBOARD KIT 24V-40A 230V | |
| EB1 | 9100001879 | | CONTROLLER MAIN MACHINE KIT | |
| EB2 | 1466649000 | | Fahrelektronik 24V 240A A.C. SIP | |
| EB3 | 1466681000 | | CONTROLLER DISPLAY SIP | |
| EB4 | 1466679000 | | DASHBOARD CONTROL PANEL BLUE SIP | |
| EB4 | 1466680000 | | DASHBOARD CONTROL PANEL BLACK SIP | |
| EB5 | 1467766000 | | Display | |
| EB5 | 1467766000 | | Display | |
| ES1 | 1466645000 | | CONTACTOR 24V 100A SIP | |
| ES2 | 1466644000 | | CONTACTOR 24V 200A SIP | |
| F1 | 1466652000 | | FUSE BOLT DOWN 150A SIP | |
| F2 | 1467034000 | | FUSE BLADE 10A PKD | |
| F3 | 1467241000 | | FUSE BOLT-DOWN 160A SIP | |
| HN | 1467032000 | | HORN 24V 112DB SIP | |
| KEY | 33020442 | | Schlüsselschalter | |
| L1 | 1466889000 | | LIGHT FRONT KIT | |
| M0 | 1466461000 | | MOTOR AC 24V 1.2KW | |
| M1 | 1467040000 | | FAN RADIAL 24V SIP | |
| M2 | 1466314000 | | MOTOR FILTER SHAKER 12W 24V KIT | |
| M3 | 1466712000 | | GEARCASE HYDRAULIC 24V 800W 1CC SIP | |
| M4 | 1466946000 | | MOToR 24V 1250W 3800 RPM IP44 MP80L | |
| M5 | 1466668000 | | MOTOR GEARBOX 24VDC 120W RT BROOM SIP | |
| M6 | 1466674000 | | MOTOR GEARBOX 24VDC 120W LT BROOM SIP | |
| R1 | 1466589000 | | PEDAL ELECTRONIC ACCELERATOR KIT | |
| S1 | 1468013000 | | SENSOR BACK UP PROXIMITY | |
| S2 | 1468013000 | | SENSOR BACK UP PROXIMITY | |
| S3 | 1468013000 | | SENSOR BACK UP PROXIMITY | |
| S4 | 1468013000 | | SENSOR BACK UP PROXIMITY | |
| SW0 | 1466683000 | | Sicherheitsschalter | |
| SW1 | 1467028000 | | SEAT PKD | |
| USB | 1466247000 | | USB PORT KIT | |

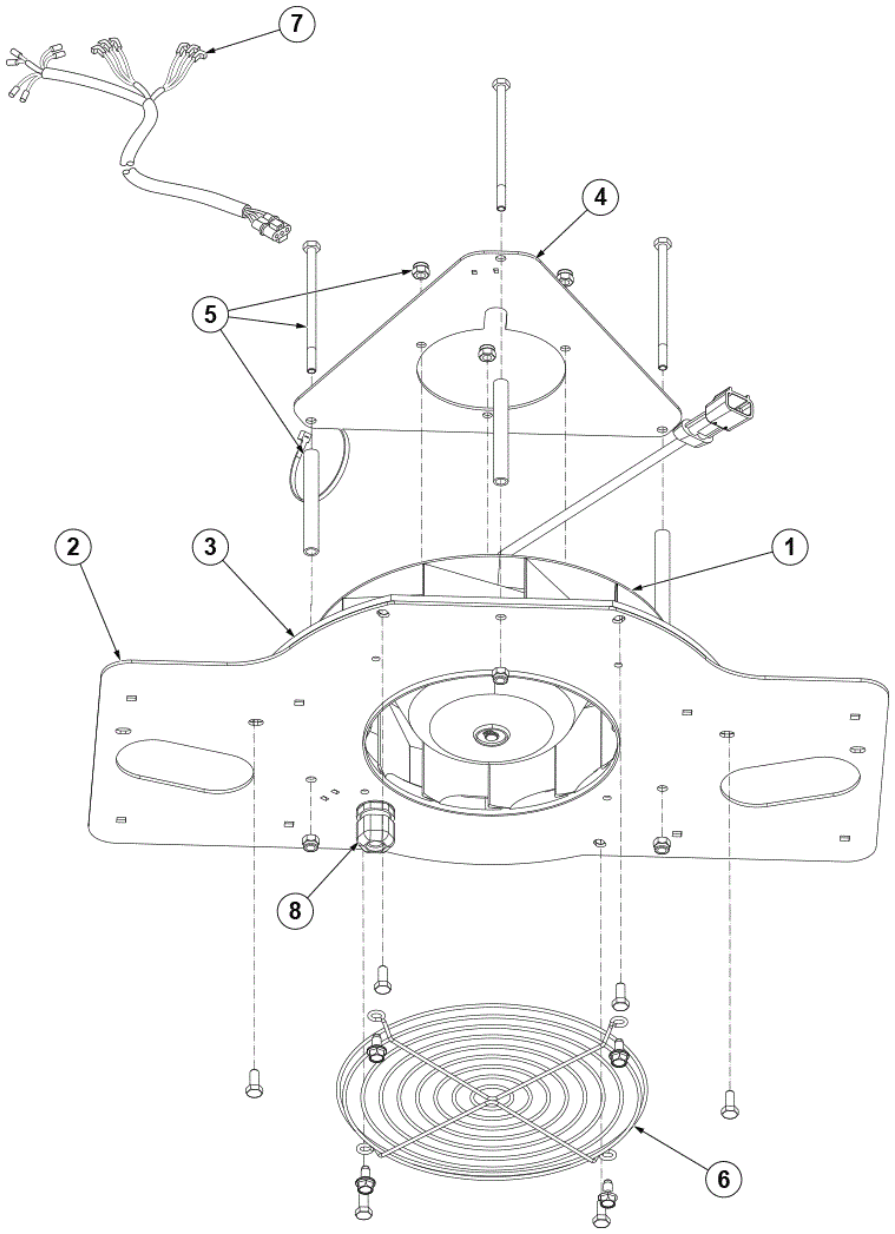
7
4
5
2
3
1
8
6

| Pos. | Artikel-Nr. | Menge | Variante | Notes |
|---|---|---|---|---|
| 1 | 1467040000 | 1 | FAN RADIAL 24V SIP | |
| 2 | 1466866000 | 1 | PLATE GALV. F FAN AND FILTER SHAKER SIP | |
| 3 | 33023192 | 1 | GASKET MOTOR VACUUM SIP | |
| 4 | 1467061000 | 1 | SUPPORT MOTOR VACUUM GALV. SIP | |
| 5 | 1466868000 | 1 | ABSTANDHALTER KPL F VAKUUM LÜFTERSATZ | |
| 6 | 33018805 | 1 | GRILL ELECTROFAN KIT | |
| 7 | 1467552000 | 1 | HARNESS F FILTER SHAKER AND FAN SIP | |
| 8 | 9100001779 | 1 | GLAND CABLE PLASTIC W/NUT PG13.5 SIP | |

| Pos. | Artikel-Nr. | Menge | Variante | Notes |
|---|---|---|---|---|
| EOM | 9100001879 | 1 | CONTROLLER MAIN MACHINE KIT | |
| EOM | 1466649000 | 1 | Fahrelektronik 24V 240A A.C. SIP | |
| EOM | 1466652000 | 1 | FUSE BOLT DOWN 150A SIP | |
| EOM | 1467599000 | 1 | PEDAL F BRAKE KIT | |
| EOM | 1466655000 | 1 | WIRE F RT BRAKE SIP | |
| EOM | 1466656000 | 1 | WIRE F LT BRAKE SIP | |
| EOM | 1467598000 | 1 | TIE ROD PRIMARY BRAKE SIP | |
| EOM | 1466663000 | 1 | ACTUATOR LINEAR 24V DC STRK 45MM SIP | |
| EOM | 1466668000 | 1 | MOTOR GEARBOX 24VDC 120W RT BROOM SIP | |
| WEAR | 1466670000 | 1 | BROOM SIDE 302X500 PPL 1.5 BLACK | |
| EOM | 1466674000 | 1 | MOTOR GEARBOX 24VDC 120W LT BROOM SIP | |
| EOM | 1466681000 | 1 | CONTROLLER DISPLAY SIP | |
| EOM | 1466691000 | 1 | GEAR BOX 7.5/1 71 B14 SIP | |
| EOM | 1466697000 | 1 | TIE-ROD METALLIC F BROOM SPRING SIP | |
| EOM | 1466701000 | 1 | KNOB LOBES M10 F W/ORANGE CAP SIP | |
| EOM | 1466712000 | 1 | GEARCASE HYDRAULIC 24V 800W 1CC SIP | |
| EOM | 1466723000 | 1 | CYLINDER HYDRAULIC 25/16/120 CPL KIT | |
| EOM | 1466724000 | 1 | BLOCK PLASTIC F LIFTING ARM GUIDE SIP | |
| EOM | 1466790000 | 1 | CYLINDER HYDRAULIC 40/25/470 CPL KIT | |
| EOM | 1466856000 | 1 | LEVER F FAN HOLDER BLOCK KIT | |
| EOM | 1466859000 | 1 | HUB F SIDE BROOM SIP | |
| WEAR | 1466860000 | 1 | WHEELS SOLID 4.00-8 CPL KIT | |
| EOM | 1466861000 | 1 | CAM PLASTIC F HOPPER POSITIONING KIT | |
| EOM | 1466862000 | 1 | GASKET DOUBLE BULB RUBBER L.2020MM PKD | |
| EOM | 1466879000 | 2 | BRACKET GALV. F FILTER SHAKER SIP | |
| WEAR | 1466936000 | 1 | BROOM SIDE 302X500 MIX STEEL | |
| EOM | 1466946000 | 1 | MOToR 24V 1250W 3800 RPM IP44 MP80L | |
| EOM | 1467009000 | 2 | SPRING COMPRESS. D.E.13.5 4 PCS SET | |
| EOM | 1467023000 | 1 | HUB LEFT MAIN BROOM PKD | |
| EOM | 1467024000 | 1 | SPRING PKD | |
| EOM | 1467030000 | 1 | BEARING BALL 6003 2RS PKD | |
| EOM | 1467034000 | 1 | FUSE BLADE 10A PKD | |
| EOM | 1467036000 | 2 | KNOB LOBES M10 FEMALE PKD | |
| EOM | 1467039000 | 1 | FEDERZUG AUS KOHLENSTOFFSTAHL SIP | |
| EOM | 1467040000 | 1 | FAN RADIAL 24V SIP | |
| EOM | 1467042000 | 1 | LATCH RUBBER PKD | |
| EOM | 1467046000 | 1 | SPRING EXTENSION D.E.18 WIRE D.2 SIP | |
| EOM | 1467054000 | 1 | VALVE BLOCK SIP | |
| EOM | 1467056000 | 1 | HUB MAIN BROOM PKD | |
| EOM | 1468013000 | 2 | SENSOR BACK UP PROXIMITY | |
| WEAR | 1467066000 | 1 | SHOE BRAKE SIP | |
| WEAR | 1467069000 | 1 | ROLLER SIDE BLADE SIP | |
| EOM | 1467070000 | 1 | BOLZEN D.10 BÜRSTE M. CLIP PKD | |
| EOM | 1467071000 | 1 | SPRING EXTENTION D.E.30 WIRE D.5 SIP | |
| WEAR | 1467076000 | 1 | BROOM SIDE 302X500 MIX 5 | |
| EOM | 1467209000 | 1 | VALVE FLOW CONTROL 5L/MIN 1/4 GAS SIP | |
| EOM | 1467210000 | 1 | SOLENOID 24V 18W N-H13 SIP | |
| EOM | 1467211000 | 1 | CARTRIDGE SOLENOID VALVE 4/2 SIP | |
| EOM | 1467212000 | 1 | CARTRIDGE SOLENOID VALVE 4/3 SIP | |
| EOM | 1467213000 | 1 | CAP PRESSURE D19 SIP | |
| EOM | 1467214000 | 1 | CAP F MP80L MOTOR BRUSHES SIP | |
| EOM | 1467215000 | 1 | CAP F MOTOR BRUSHES SIP | |
| EOM | 1467241000 | 1 | FUSE BOLT-DOWN 160A SIP | |
| EOM | 1467242000 | 1 | MOTOR ELECTRIC 24V 800W SIP | |
| EOM | 9098329000 | 1 | Schanier Kit | |
| WEAR | 1467083000 | 2 | CARBON BRUSH 2 PCS SET | |
| WEAR | L08603949 | 1 | Kohlenbürsten Kit 4pcs | [1] |
| EOM | 1466679000 | 1 | DASHBOARD CONTROL PANEL BLUE SIP | |
| EOM | 1467243000 | 1 | STUD BOLT M/F 1/4 BSP ES. 19 SIP | |

Part Notes:

[1] - REPLACED BY 56601509

© 2023 - Nilfisk A/S